Wood Drawer Guides • Drill Press Sanding Table
Drawing Arcs • Cutting Board • Hardware Storage

# Woodsmith®

Vol. 17 / No. 102

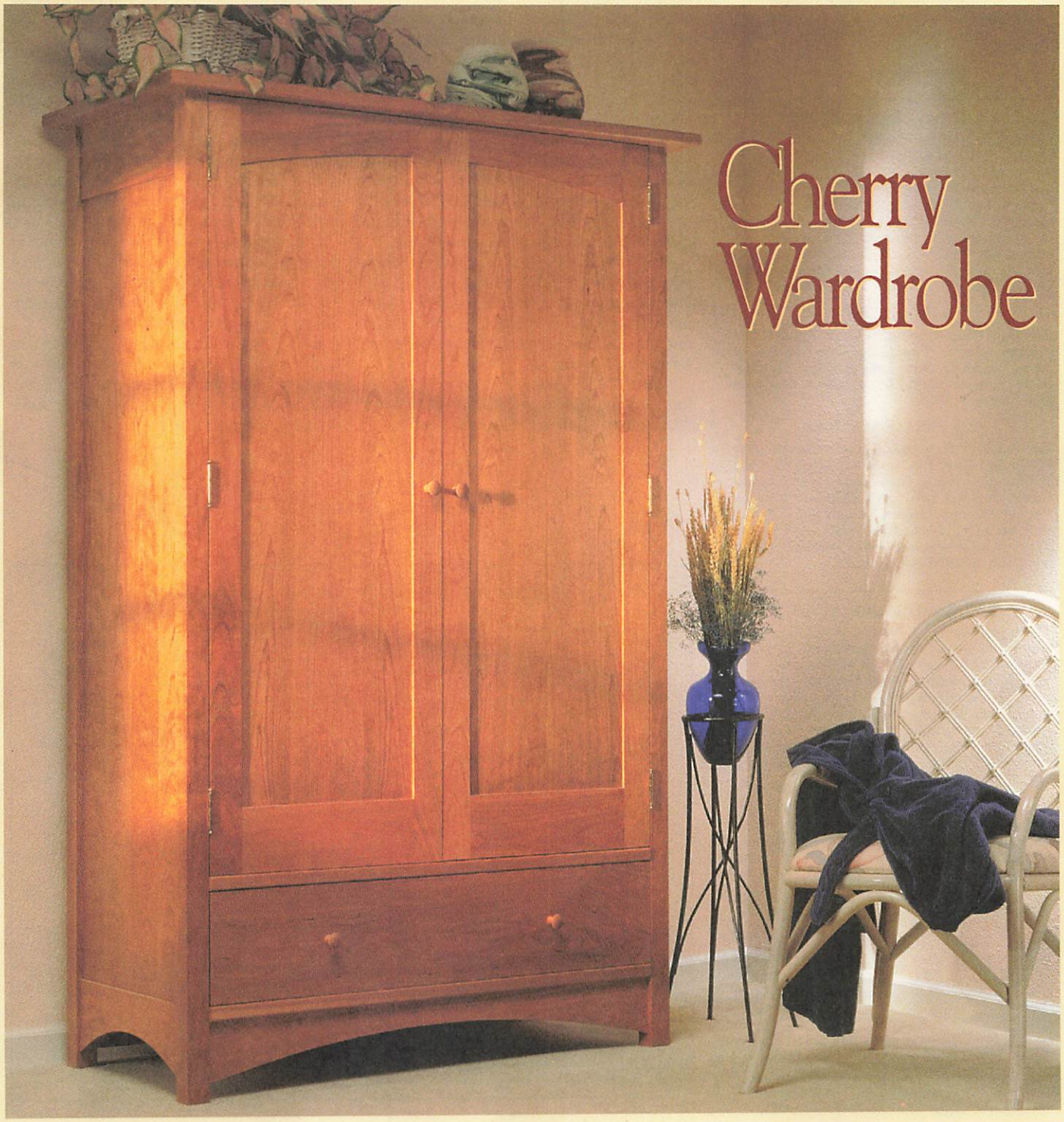

No. 102 December, 1995

Woodsmith®

**Publisher** Donald B. Peschke
**Editor** Terry J. Strohman
**Associate Editors** Jon Garbison, Mark Williams
**Art Director** Todd Lambirth
**Senior Illustrators** David Kreyling, Cinda Shambaugh, Dirk Ver Steeg
**Illustrator** Erich Lage

**CREATIVE RESOURCES**

Creative Director: Ted Kralicek • *Executive Editor:* Douglas L. Hicks • *Assistant Editor:* Vincent S. Ancona • *Project Design Dir.:* Ken Munkel • *Sr. Project Designer:* Kent Welsh • *Shop Manager:* Steve Curtis • *Shop Craftsman:* Steve Johnson • *Sr. Photographer:* Crayola England • *Electronic Publishing:* Douglas M. Lidster • *Electronic Comunication Coordinator:* Gordon C. Gaippe • *Associate Graphic Design Dir.:* Susie Ryder • *Sr. Graphic Designer:* Chris Glowacki • *Graphic Designer:* Cheryl L. Cynor

**CIRCULATION**

Circulation Director: Susan Du Bois • *Assistant Circulation Director:* Troy J. Dowell • *Subscription Managers:* Sandy Baum, Paige Rogers • *Assistant Subscription Manager:* Julie Greenlee • *Newsstand Mgr:* Kent A. Buckton

**CORPORATE SERVICES**

Vice President, Planning and Finance: Jon Macarthy • *Controller:* Robin Hutchinson • *Sr. Account.:* Laura Thomas • *Bookkeeping:* Holly Lucas • *Production Dir.:* George Chmielarz • *Production Mgr.:* Carol Quijano • *Pro. Dev. Dir.:* Joyce Moore • *Network Administrator:* Nick Thielen • *Admin. Assistants:* Cheryl A. Scott, Julia Fish • *Receptionist:* Jeanne Johnson • *Building Maintenance:* Ken Griffith

**WOODSMITH MAIL ORDER**

Operations Director: Bob Baker • *Art Dir.:* Cindy Scarpino • *Materials Mgr.:* Mark Mattiussi • *Customer service Mgr.:* Jennie Enos • *Warehouse Supervisor:* Nancy Johnson • *Buyer:* Linda Jones • *System Operator:* Tammy Aldini • *Team Leader:* Karla Cronin • *Tech. Supp:* Dave Stone • *Customer Service Reps.:* Jennifer Murphy, Joy Krause, Sara Kono, Anna Cox, Adam Best, Kristi Andrews, Margo Petrus • *Warehouse:* Gloria Sheehan, Chuck Carlson, Sylvia Carey, Larry Prine, Scott Gilliam, Cathy Steiner

**WOODSMITH STORE**

Manager: Dave Larson • *Assistant Manager:* Paul Schneider • *Sales Staff:* Wendell Stone, Pat Lowery • *Office Manager:* Vicki Edwards

Woodsmith® (ISSN 0164-4114) is published bimonthly (Feb., Apr., June, Aug., Oct., Dec.) by August Home Corp., 2200 Grand, Des Moines, IA 50312.
Woodsmith® is a registered trademark of August Home Corp. Copyright© 1995 August Home Corporation. All rights reserved.
Subscriptions: Single copy: $3.95. One year subscription (6 issues), $19.95. Two years (12 issues), $35.95. (Canada/Foreign add $5 per year, U.S. funds.)
Second Class Postage Paid at Des Moines, IA and at additional offices.
Postmaster: Send change of address to *Woodsmith*, Box 10718, Des Moines, IA 50350.
Subscription Questions? Call **1-800-333-5075**, 8:00 am to 5:00 pm, Central Time, weekdays. Fax 515 - 283 - 0447
E-Mail. Prodigy: EDJE97A, CompuServe: 75330,2301, Internet: 75330.2301@compuserve.com., America Online: Donpeschke.

Printed in U.S.A.

EDITOR'S COLUMN

# Sawdust

Over the years, I've found that many of the problems that crop up with woodworking projects can be solved with simple solutions. Take the projects in this issue for example.

I wanted the wardrobe to look as good on the inside as it did on the outside and still remain affordable. Instead of using solid cherry or expensive ¾"-thick plywood, the solution was simple. Just sandwich two thin pieces of plywood back-to-back in the case and door frames.

With the cutting board on page 18, the problem was keeping the ends from splitting when cleaning it in water. Here, a dovetail-shaped key "locks" the pieces together to keep the joints from opening.

And who hasn't had to pick through a pile of hardware dumped out of a can trying to find just the right screw? We came up with a couple of quick solutions. Check out one of the hardware organizers featured on page 22.

**NEW FACES.** While we've been busy putting out this issue, we've also been busy adding some new faces around here.

First of all, Todd Lambirth joined us as Art Director for *Woodsmith*. One of Todd's main responsibilities is to gather information from Illustrators, Editors, and Designers. Then he has to decide how to present all this information visually in the best possible way.

Then, Susan Du Bois came on board as our new Circulation Director. Susan is in charge getting new subscribers and keeping the old ones happy.

Next, Vince Ancona and Susie Rider joined our extended family. Vince is an Assistant Editor, and Susie is an Associate Graphic Design Director, and both work in the Creative Resources department.

Creative Resources is made up of a lot of talented people and their job is to support the magazines produced by August Home Publishing. (This includes; *Woodsmith*, *ShopNotes*, and *Garden Gate*.)

Finally, we've added three people to our Mail Order department. Margo Petrus is our new Customer Service Representative. And Scott Gilliam and Cathy Steiner have joined the Warehouse Staff.

STATEMENT OF OWNERSHIP, MANAGEMENT AND CIRCULATION
(Required by 39 U.S.C. 3685)

1. Publication Title: Woodsmith. 2. Publication No.: 0164-4114. 3. Filing Date: September 6, 1995. 4. Issue Frequency: Bimonthly. 5. No. of issues published annually: 6 (six). 6. Annual subscription price: $19.95. 7. Complete mailing address of known office of publication: 2200 Grand Avenue, Des Moines, (Polk County), Iowa 50312-5306. 8. Complete mailing address of the headquarters or general business office of the publisher: 2200 Grand Avenue, Des Moines, Iowa 50312-5306. 9. Full names and complete mailing address of publisher, editor, and managing editor: Publisher: Donald B. Peschke, 2200 Grand Avenue, Des Moines, Iowa 50312; Editor: Terry J. Strohman, 2200 Grand Avenue, Des Moines, Iowa 50312. 10. Owner: August Home Corporation, 2200 Grand Avenue, Des Moines, Iowa 50312; Donald B. Peschke, 2200 Grand Avenue, Des Moines, Iowa 50312. 11. Known bondholders, mortgagees, and other security holders owning 1 percent or more of total amount of bonds, mortgages or other securities: None. 12. (Does not apply.) 13. Publication Name: Woodsmith. 14. Issue Date for Circulation Data Below: August 1995. 15. Extent and nature of circulation:

| | Average no. copies each issue during preceding 12 months | Actual no. copies of single issue published nearest to filing date |
|---|---|---|
| A. Total no. copies printed (net press run) | 446,248 | 435,937 |
| B. Paid and/or requested circulation: | | |
| 1. Sales through dealers, street vendors and counter sales | 30,360 | 60,283 |
| 2. Mail subscriptions (paid and/or requested) | 358,541 | 352,276 |
| C. Total paid and/or requested circulation | 388,901 | 412,559 |
| D. Free distribution by mail (samples, complimentary, and other free copies) | 105 | 103 |
| E. Free distribution outside the mail (carriers or other means) | 0 | 0 |
| F. Total free distribution | 105 | 103 |
| G. Total distribution | 389,006 | 412,662 |
| H. Copies not distributed | | |
| 1. Office use, left over, unaccounted, spoiled after printing | 16,121 | 9,629 |
| 2. Returns from news agents | 41,121 | 13,646 |
| I. Total | 446,248 | 435,937 |
| Percentage paid and/or requested circulation | 99.97% | 99.98% |

16. This statement of ownership will be printed in No. 102, the December, 1995 issue of this publication.
17. I certify that the statements made by me above are correct and complete.
(signed) Donald B. Peschke, Publisher

# Contents

## FEATURES


**Cherry Wardrobe** ..... 6

*How do you build a big project without becoming overwhelmed? Keep the design clean, the joinery simple, and work on it one section at a time. That's the concept behind this cherry wardrobe.*

**Drawing an Arc** ..... 17

*Anytime you need to create an arc, you have two problems: finding the centerpoint and drawing it. But a jig sent in by a reader solves both problems easily.*

**Cutting Board** ..... 18

*As a cutting board is exposed to water, the joint lines tend to split open. Our solution for this project was to "lock" the joints together with attractive butterfly-shaped keys.*

**Hardware Storage** ..... 22

*Here are two simple hardware storage systems: One organizes the hardware on your bench. The other is a handy tote for taking the hardware from the shop to the job.*

**Wood Drawer Guides** ..... 26

*Adding a drawer to a design requires more than just determining its size. It also has to slide in and out smoothly. Here are some design and building notes we put together on the two types of drawer guides used in this issue.*

**Drill Press Sanding Table** ..... 30

*This unique table, sent in by one of our readers, clamps to your drill press and uses a single insert that can handle up to six different size sanding drums.*


## DEPARTMENTS


**Tips & Techniques** ..... 4
**Shop Notes** ..... 28
**Sources** ..... 31


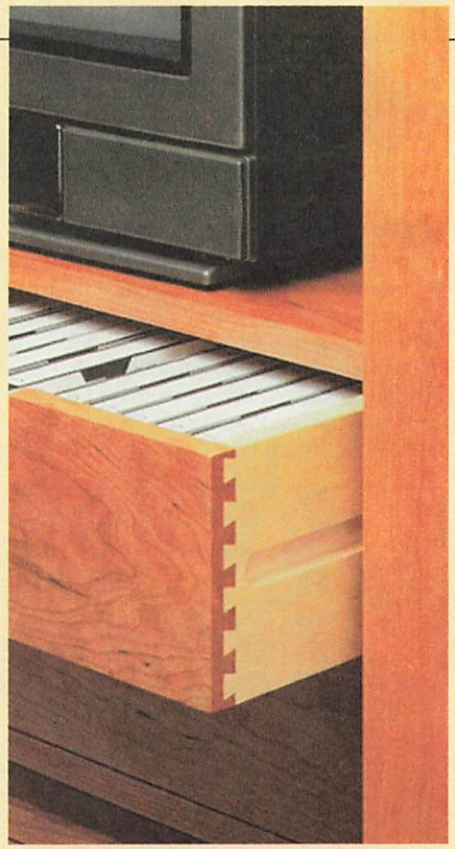

*Wardrobe* *page 6*

*Cutting Board* *page 18*

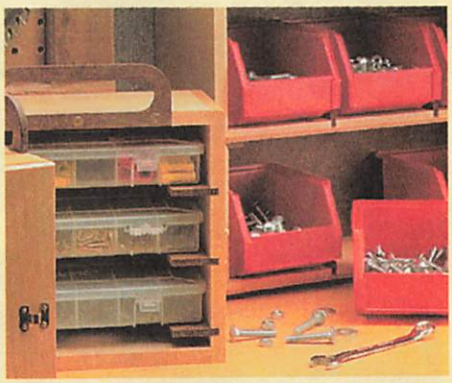

*Hardware Storage* *page 22*

# Tips & Techniques

## KEY HOLE HANGER

■ I wanted to make a keyhole slot in the back of a frame. But I didn't have a special keyhole bit that you use with your router. So instead of buying one, I used a ½"-diameter brad point drill bit and a ½" dovetail bit.

To make a keyhole slot, drill a starter hole ½" deep with the brad point bit, see Figs. 1 and 1a. (I used a brad point bit but a Forstner bit would also work.)

Next, I installed a ½" dovetail bit in my plunge router and used an attached edge guide to rout the dovetail slot, see Figs. 2 and 2a. Simply plunge the router into the hole, lock it in position, and rout the slot.

The dovetail bit cuts a flared slot that matches the tapered head of a woodscrew, see Fig. 3a. Just locate a wall stud where you plan to hang the frame. Then use a No. 10 woodscrew to hold it in place, see Fig. 3.

*Larry Heinonen*
*Union City, Michigan*

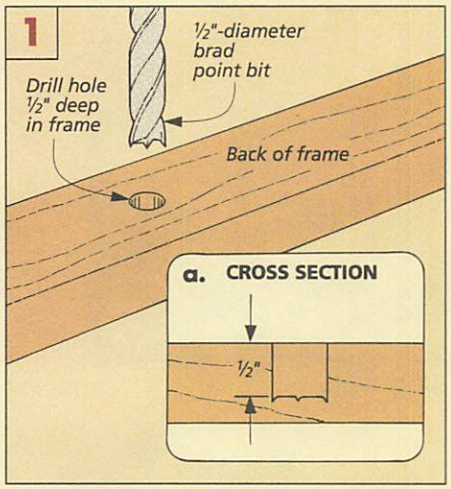


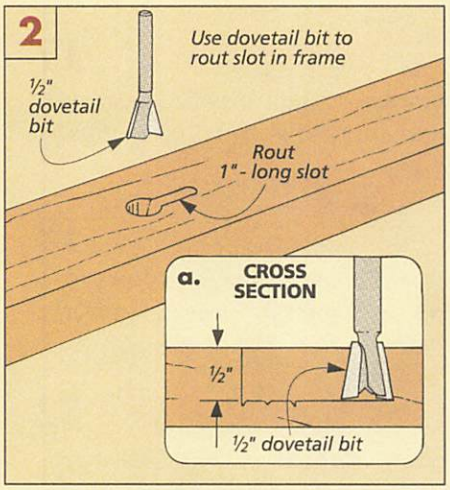


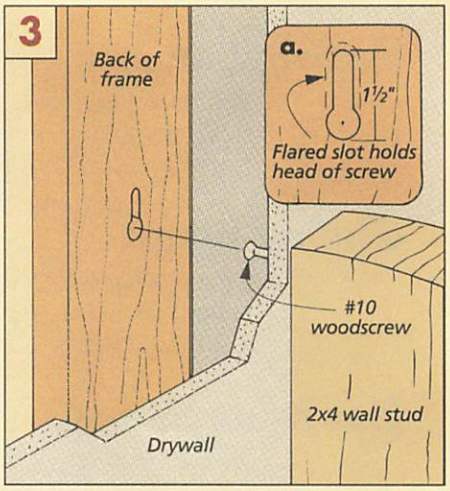


## GLUE SUPPORTS

■ I use pipe clamps to glue up large panels. But the steel pipe can create problems. If there's any glue squeeze-out that contacts the pipes, it can end up staining the wood. One way to prevent this from happening is to raise the workpiece up off the pipe with inexpensive spacers.

These spacers are just PVC couplings available at most hardware stores. They slip over the pipe and are easily adjusted to support the workpiece.

*George Johnson*
*Foster City, California*

## INEXPENSIVE END VISE

■ An end vise is a good way to hold a workpiece securely to a workbench. But commercial models are just too expensive. So I made my own with the screw handle from a pipe clamp, an inexpensive threaded floor flange, and a short piece of pipe threaded on both ends.

Simply attach the flange to your workbench and install the pipe and screw handle. Note: For clearance, you may need to cut off the top part of the flange.

*Doug Thalacker*
*Racine, Wisconsin*

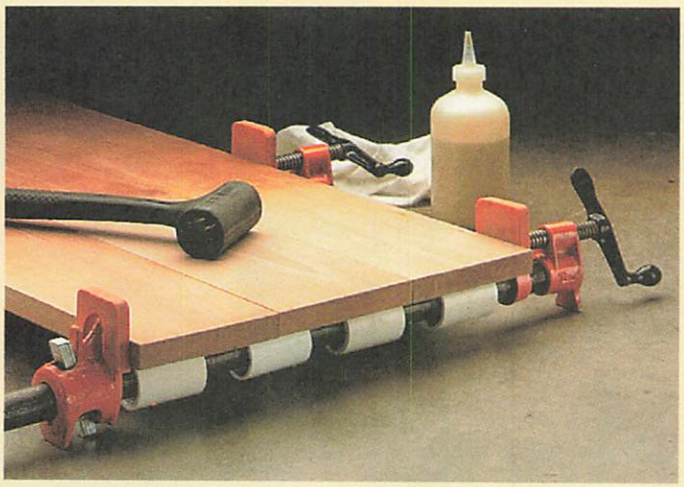

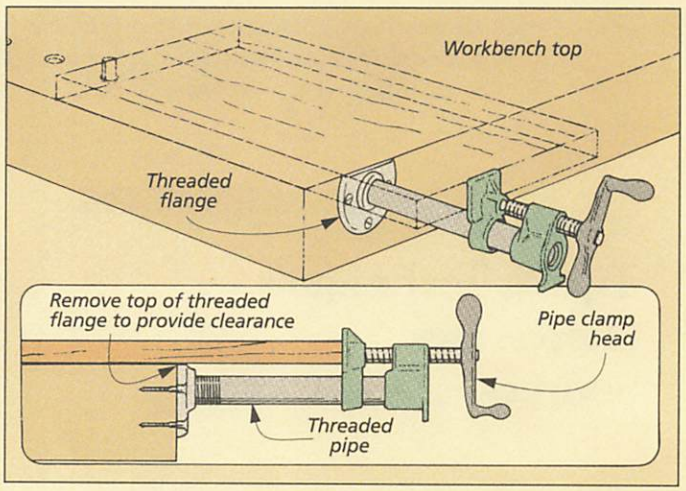

## HANDLE EXTENSION

■ Adjusting the angle on my contractor-type table saw was never easy. The handwheel, tucked under the right wing of the saw, was hard to reach and difficult to turn. To solve this problem, I added an extension to my angle adjustment handle.

Simply remove the existing handwheel and replace it with a ½" coupler and a length of ½"-dia. steel rod, see detail. The rod extends through a piece of wood bolted to the wing for support.

*Robert Skou*
*Schaller, Iowa*

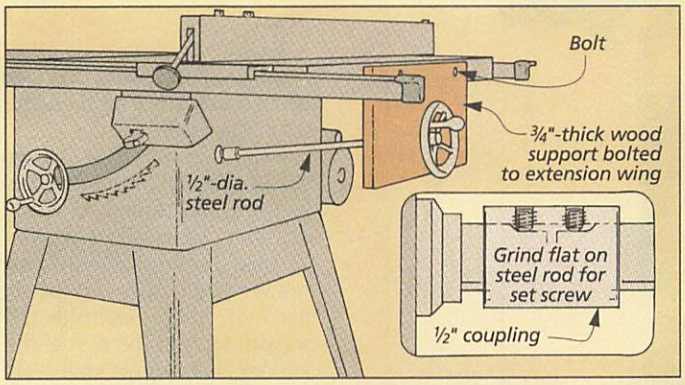


## BRAD MAGNET

■ Driving small nails or brads can be hard on your fingers. One way to hold them in position so they can be started in the wood is with a small magnet.

*James Nicomato*
*Lackawanna, New York*

## BAND SAW TENSION

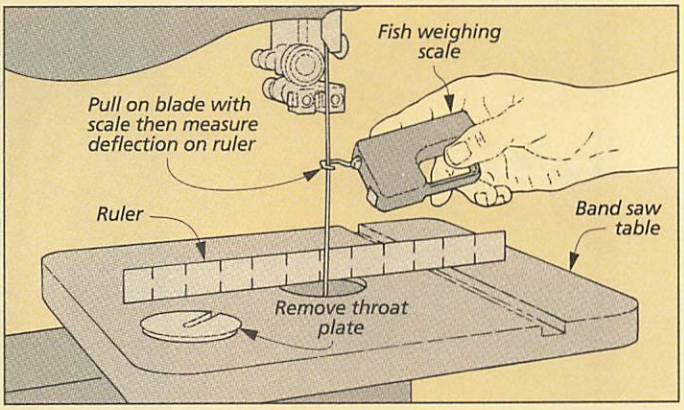


■ Setting the tension on a band saw blade is a guess at best. To solve this problem, I set the tension by measuring blade deflection with an inexpensive fish weighing scale and a ruler.

To do this, remove the throat plate and back off the blade guides. Then pull on the blade with the fish scale and measure the deflection with a ruler. A ¼" deflection with a one pound pull is just about right for a ¼" blade.

You may have to experiment to find the right tension on other size blades. But this way it's easy to set the same tension every time you change blades.

*Donald Honenberger*
*Lynn, Indiana*

## CARRIAGE BOLT

■ If the square shank on a carriage bolt rounds out the hole, there's no way to keep it from turning. Instead of getting a bigger bolt, I modify the existing one. Just file a small notch in the head and drive in a small brad to keep the bolt from turning.

*Lemo Johnston*
*Shelton, Washington*

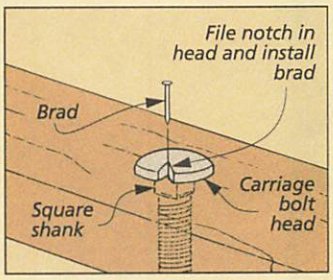


## QUICK TIPS

### BEESWAX DISPENSER

■ I use beeswax on the threads of my screws. But the cake of wax that sits on my workbench is always covered in sawdust — when I can find it.

To keep my wax handy and cleaner at the same time, I melt and pour a little into an empty deodorant applicator. Then simply turn the knob on the applicator for a clean supply as needed.

*Charles Lokey*
*Atlanta, Georgia*

### WATERSTONE DISH MOP

■ I use a waterstone to sharpen my chisels and plane irons. But to work properly, waterstones must be cleaned after each use.

One way to do this is with a common household dish mop. (It's a ball of cotton threads, held together with a twisted wire, and stuck into a plastic handle). Just dip it in water and swab the stone clean after each use.

*Ed Hegyera*
*Kenosha, Wisconsin*

### SUBMIT YOUR TIPS

If you would like to share an *original* shop-tested tip, send it to: *Woodsmith*, Tips and Techniques, 2200 Grand Avenue, Des Moines, Iowa 50312. Or if it's easier, FAX it to us at: 515–282–6741. Or use our E-Mail: 75330,2301 @compuserve.com.

If published, we will send you $30 to $150, depending on the published length. Include a brief explanation and sketch or photo. We'll rewrite the tip and redraw the art if needed. Also, *please* include a daytime phone number.

# Cherry Wardrobe

*Just because a project is big doesn't mean it has to be complicated. When designing this wardrobe, we kept the design and joinery simple.*

The problem with large projects is that they can seem much more intimidating than they really are.

Take this wardrobe, for instance. You might think a project this size would be really complex. Especially when you add some options like the four-drawer inner case. But the inner case just slides inside the wardrobe. And the rest of the joinery isn't complicated at all. Just simple mortise and tenon joints, rabbets, and stub tenon and groove joints.

Even the curved upper rails on the doors are easier than they look. Rather than buy a special router bit, I cut the groove to hold the door panels *before* the curve is cut. It's deeper than usual, but it can be done on the table saw, and it also lets me avoid cutting curves on the panels that fit into the rail.

Another question that often comes up with large projects is cost. After all, hardwoods can be expensive. But take a closer look. Much of what you see is plywood, not hardwood. Both the door and side panels are made up of two layers of ¼" cherry plywood placed back-to-back. Two layers are used because ¼" plywood has only one good face. And I wanted the doors to look as good when they were opened as when they were closed.

# Construction Details

*Overall Dimensions: 72" x 46" x 22"*
*Hardwood: 9.3 bd. ft. of 8/4 cherry*
*33.6 bd. ft. of 5/4 cherry*
*31.8 bd. ft. of 4/4 cherry*
*22.4 bd. ft. of 4/4 maple*
*Plywood: Four 4x8 sheets of ¼" cherry*

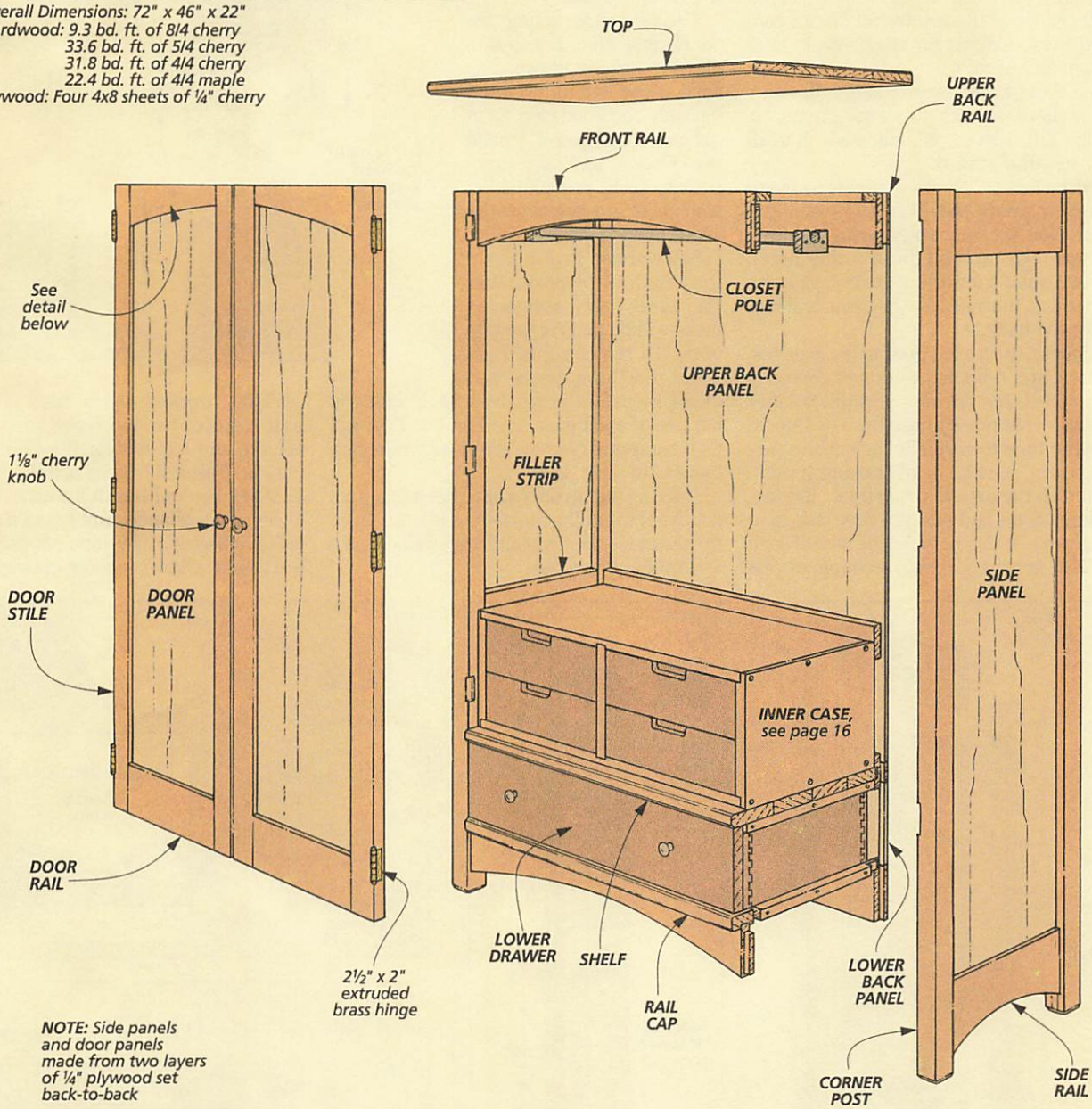


***NOTE:*** *Side panels and door panels made from two layers of ¼" plywood set back-to-back*

## SUPPLIES

- (3 pair) 2½" x 2" Extruded Brass Hinges
- (4) 1⅛"-dia. Cherry Knobs
- (4) 7/16"-dia. Bullet Catches
- (8) #8 x 2" Fh Woodscrews
- (6) #8 x 1¾" Fh Woodscrews
- (24) #8 x 1½" Fh Woodscrews
- (4) #8 x 1¼" Fh Woodscrews
- (12) #8 x ¾" Fh Woodscrews
- (6) #8 x 1½" Rh Woodscrews
- (24) #8 x ⅝" Ph Woodscrews
- (30) #8 Flat Washers
- (4) #6 x ¾" Fh Woodscrews
- (71) #6 x ⅝" Fh Woodscrews

**UPPER DOOR RAIL**

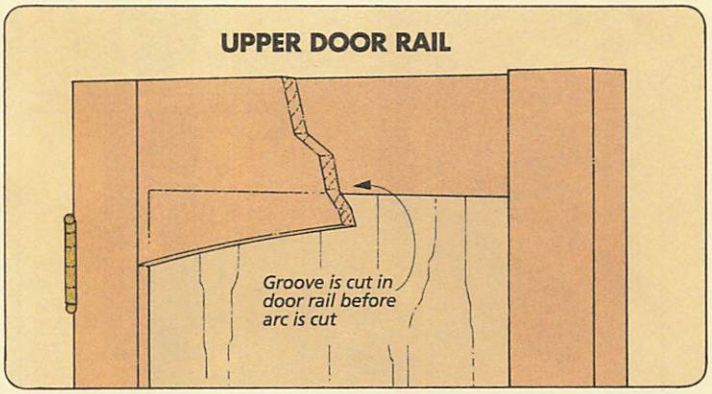

## CASE SIDES

The easiest way to build the case of this wardrobe is to do it in sections. I started with the sides of the wardrobe. Then I connected these side assemblies with rails at the front and back.

Even though this project is big, the nice thing is there isn't any procedure that's especially difficult or complicated. It's all pretty straightforward.

CORNER POSTS. The first step is to make the **corner posts (A)**. This is like building a fence. You set the corner posts and then work your way in. With these corner posts, there are quite a few things to cut: grooves for the sides, mortises for the front, and rabbets for the back.

Of course, the trick is getting the grooves, mortises, and rabbets positioned correctly on each post, see drawing at right. So after I cut the corner posts to size from 8/4 stock, I took the time to carefully lay out the cuts on each post, see Fig. 1 and drawing at right.

When all the grooves, mortises, and rabbets have been laid out, the first step is to cut a groove ¾" from the inside face of each post. This groove will hold a couple of side rails and *two* ¼"-thick plywood side panels.

The reason for using two panels instead of one is simple: ½" cherry plywood is hard to find and ¼" plywood has only one good face. So to get two good faces, I used two sheets and set them back-to-back, see photo on page 9. This determines the width of each groove.

Since these grooves run the length of the posts, after the sides are assembled there will be gaps at the bottoms. To remedy this, I cut some 1¾"-long plugs and glued them in the grooves flush with the bottom of each post, see Fig. 1b. This will fill the gap and create a shoulder for the bottom rail to sit on later.

Once all four grooves have been plugged, I decided to cut the mortises and rabbets on the posts for the front and back rails before assembling the sides.

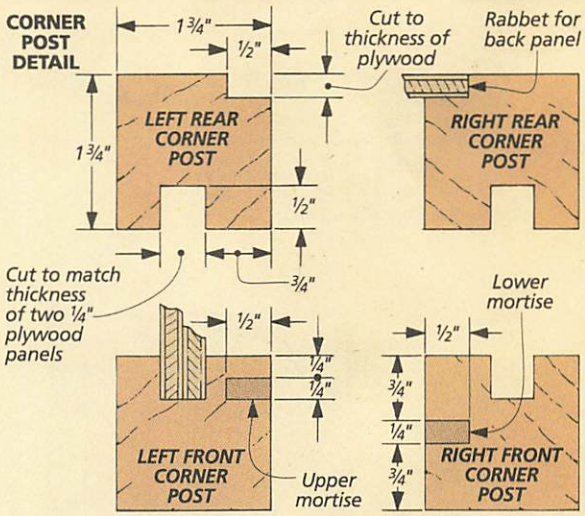


First, I worked on the front posts. Each post requires two mortises: one for the upper rail and another for the lower rail, see Fig. 1a. These mortises are the same size, but they don't line up with each other. The lower mortise is centered, while the upper rail mortise is offset towards the inside of the case to allow room for the doors.

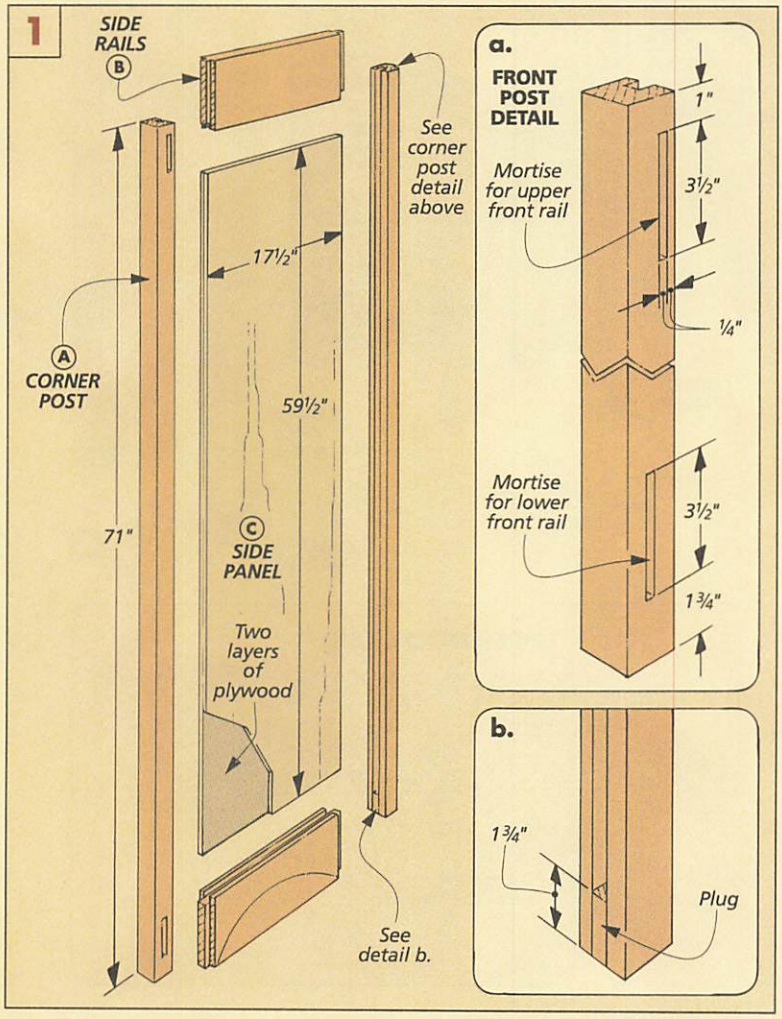


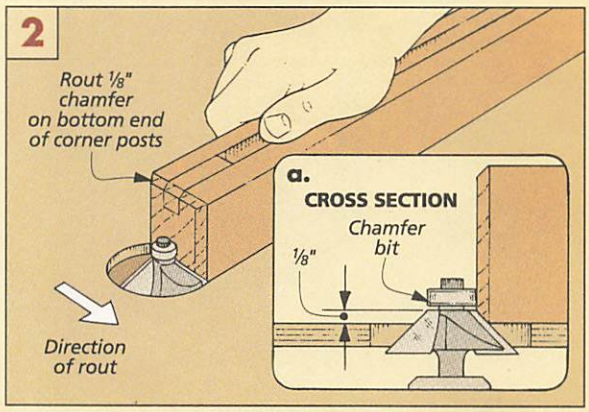


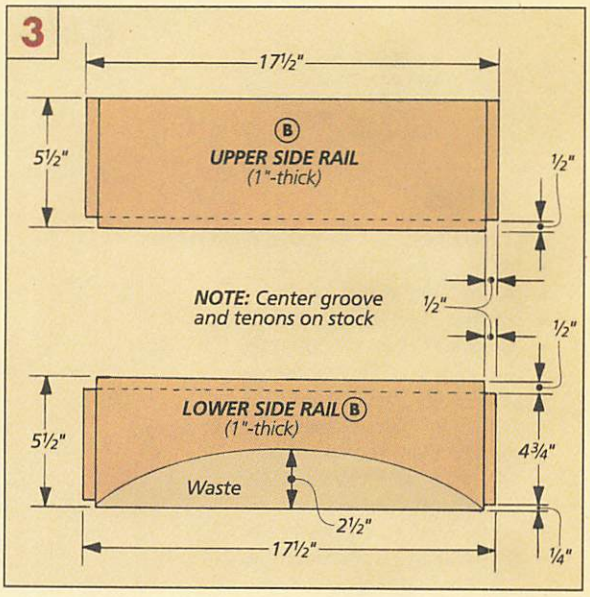

When the mortises on the front posts are complete, it's time to set them aside and work on the back corner posts. Both back posts need a ½"-wide rabbet on their back, inside edges that's deep enough to hold the ¼" plywood backs (there will be two — an upper back and lower one) added later, see drawing at left.

Finally, I chamfered the bottom edges of all four corner posts, see Fig. 2.

**RAILS.** With the posts complete, the next step is to add a pair of rails. These rails connect the corner posts to create a frame. The 1"-thick **side rails (B)** are the same size (5½" x 17½"). And they also have a groove cut on their inside edges that matches the grooves on the corner posts.

Now the upper rail is done, but the lower rail requires a little more work. First, a shoulder needs to be cut on the bottom edge of the stub tenon, see Fig. 3. (The shoulder on top is created by the groove.) Second, there's an arc cut along the bottom edge. Note: To lay out these arcs, see page 17.

**SIDE PANELS.** Now the posts and rails can be dry assembled so you can measure the opening for the side panels. Cut the two ¼" plywood **side panels (C)** for each assembly to fit into the grooves. Then glue the posts, rails, and panels together.

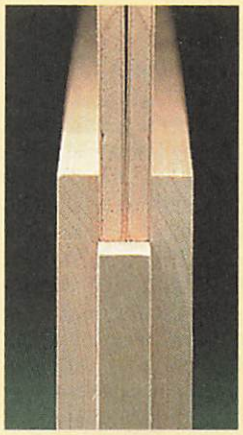

***Panel Construction.*** *The groove on this side rail has been sized to hold two ¼" plywood panels. These panels are back-to-back so there's a good face both inside and out.*

## FRONT RAILS

With the side assemblies complete, they can be joined with a pair of rails at the front of the case, see Fig. 4. The nice thing here is that half the work is already done — you've already cut the mortises that hold these front rails.

**FRONT RAILS.** Both **front rails (D)** are identical. I started with ¾"-thick blanks cut to finished length and width, see Fig. 4d. (Mine were 4¾" x 39½".) Then cut tenons on both ends of each blank. These tenons should be sized to fit the mortises that have already been cut in the corner posts, refer to Fig. 1a. Note: The top front rail fits flush with the top of the side rails. But the lower rail sits ¾" below the bottom side rails to leave room for a cap added later, see Fig. 4c.

When the tenons fit the mortises, the only thing left is to cut a gentle arc at the bottom of each piece. (For more on laying out these arcs, see page 17.)

Once the front rails are complete, you can glue them between the two sides. Since the case is only being held together at the front, you'll need to make sure it's square.

**RAIL CAP.** Before moving to the back of the case, there's still one more piece to add to the front. A "cap" is added to the lower rail to create a lip below the drawer that will be added later, see Fig. 4c.

This **rail cap (E)** is cut from 1"-thick stock to fit between the posts. I wanted this cap flush with the back edge of the posts, but in the front, the cap should stick out ⅛" to create the lip below the drawer.

To hold the cap in position, a groove is cut on its bottom face, see Fig. 4c. But keep in mind that the groove won't be centered on the width of the cap. Another thing to keep in mind is that the depth of this groove should put the top of the rail cap flush with the top of the lower rails on the sides. (The depth of my groove was ¼".)

To complete the rail cap, create an ⅛" chamfer on all four edges of the front face, see Fig. 4c. Then glue the rail cap to the lower front rail.

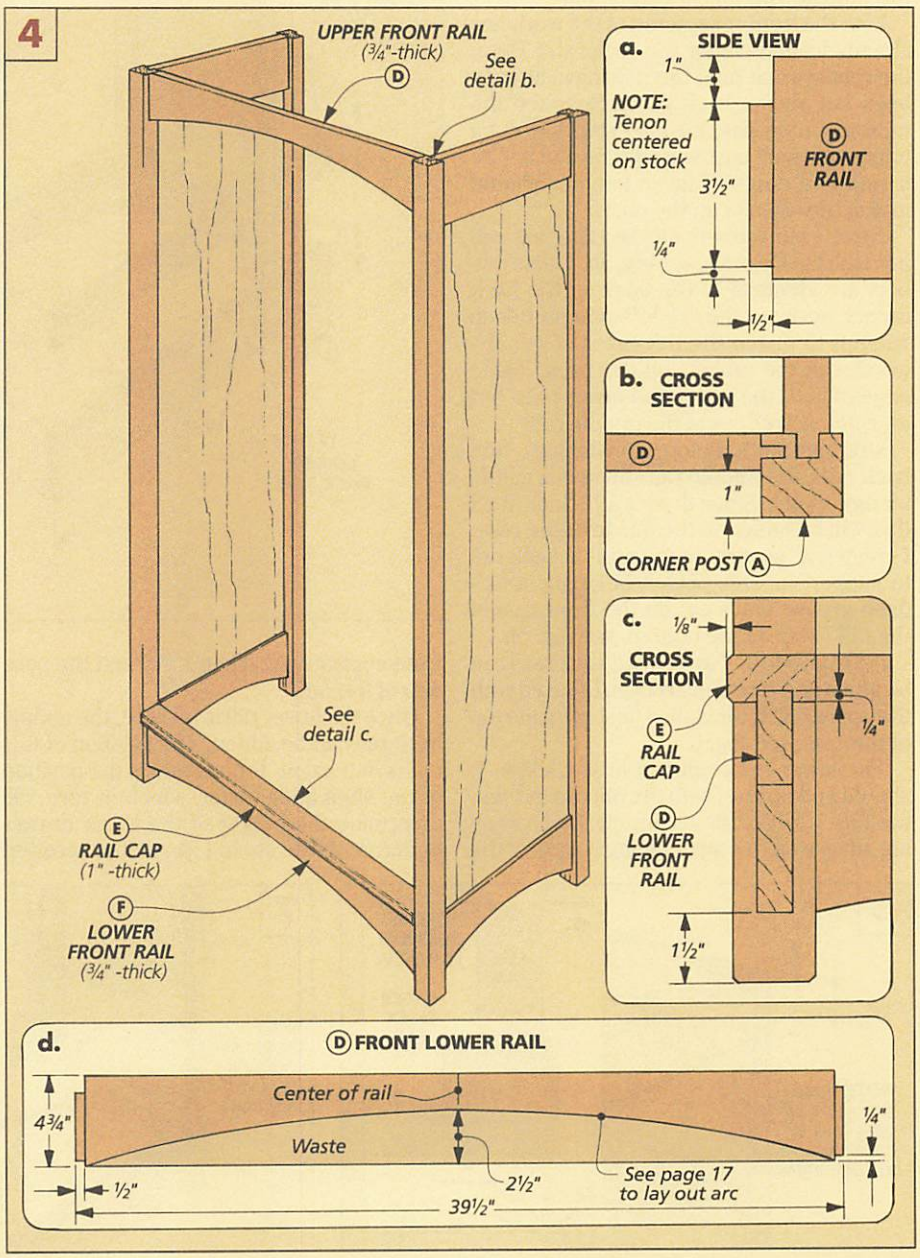

## BACK RAILS

After the front rails were added, I walked around and worked on the back side. There are three rails that connect the corner posts in back, see Fig. 5. But they also serve a couple other purposes. They hold the two ¼"-thick plywood back panels that are added later. And the middle back rail will also hold a shelf, refer to Fig. 12 on the next page.

**BACK RAILS.** All three back rails are ¾"-thick, and all are cut to the same length, see Fig. 5. The important thing here is that the rails are long enough to hold the case square, so measure the opening at the front of the case and add 1" for the tongues on the ends of the rails. (Mine were 39½" long.) As for the rails' widths, both the **upper** and **lower back rails (F)** are 5½" wide, while the **middle rail (G)** is only 3" wide.

Like the front rails, some of the work has already been done for the back rails. Here, the rabbets that hold the rails have already been cut on the back posts. So when the rails are cut to size, the next step is to cut a tongue on each end, see Figs. 5a and b. The length and depth of these tongues should match the rabbets on the posts.

Next, I cut rabbets on the rails that will hold the back panels, see Fig. 5b. These rabbets are identical to the ones on the back corner posts — they're ½"-wide and deep enough to match the thickness of ¼" plywood. Cut the rabbets on the back, inside edge of both the upper and lower rails, but on *both* back edges of the middle rail.

**SHELF POCKET.** Before installing the back rails, the middle rail still needs a little bit more work. Since there's a 1"-thick shelf that will be added to the inside of the case, I created a "pocket" in the middle back rail to support it. This pocket is simply a ⅜"-deep groove that's cut on the front face of the rail ⅞" from the bottom, see Fig. 5b.

**INSTALLATION.** Now all the back rails can be glued and screwed in place. I started with the upper rail. It's installed flush with the top of the case, see Fig. 6.

The lower back rail is a little trickier. It should end up level with the rail cap in front, see Fig. 7. To do this accurately, I set a framing square on the cap, holding it against the front corner post. Then I marked the position of the rail.

Once the lower rail is in place, the middle back rail can be added. The position of this rail is important. It determines the position of the shelf added later, which in turn will determine the height of the lower drawer underneath the shelf. I glued and screwed the middle rail 7⅛" up from the top of the lower rail, see Fig. 8.

Note: At this point, you could cut the upper and lower back panels to size from ¼"-thick plywood and screw them in place. But I decided not to add them yet. It's much easier to install the shelf and lower drawer while the backs are off.

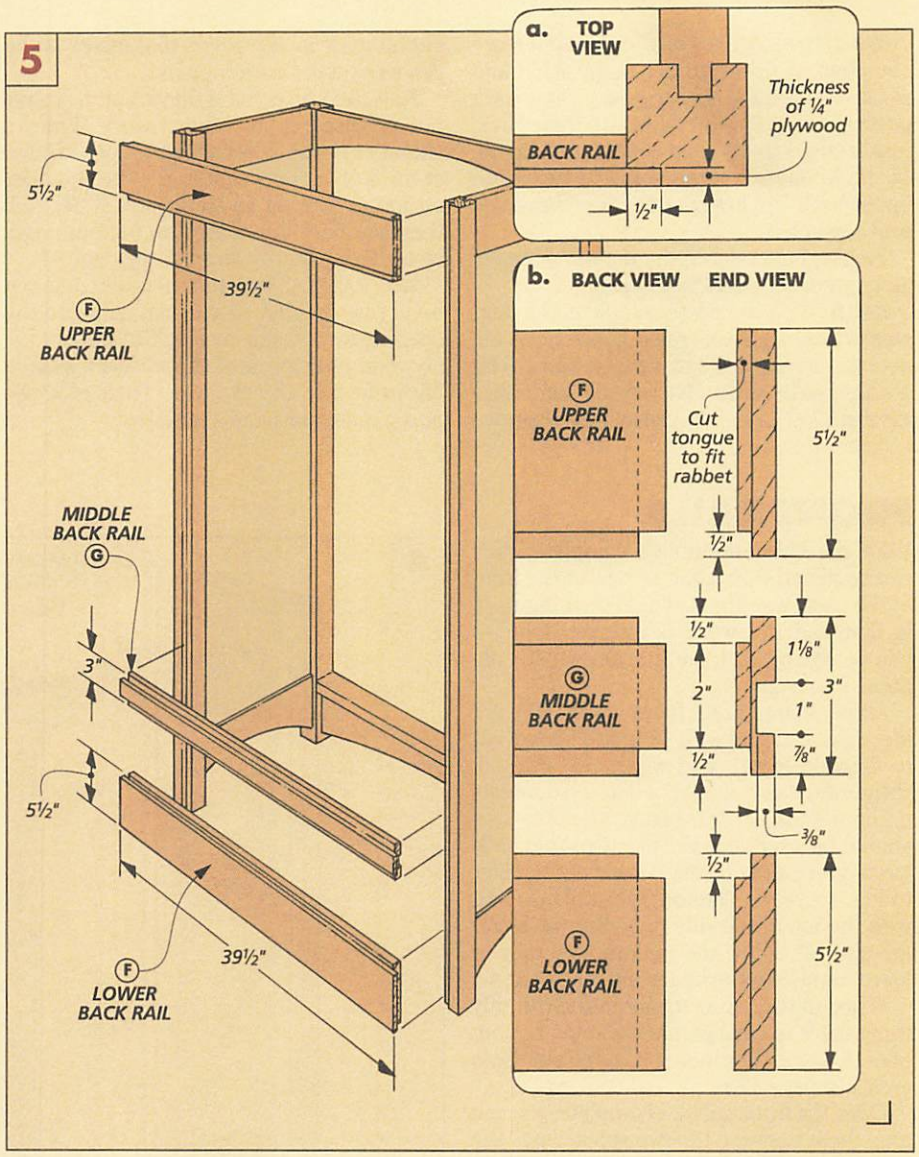


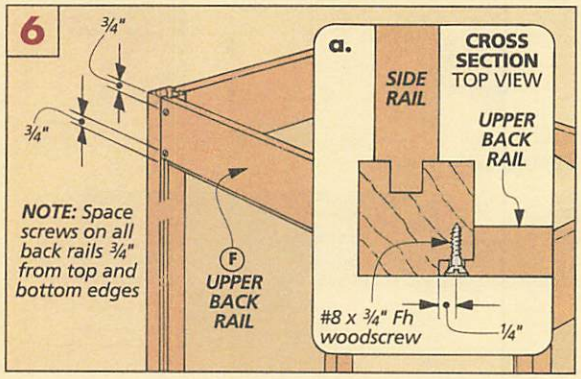


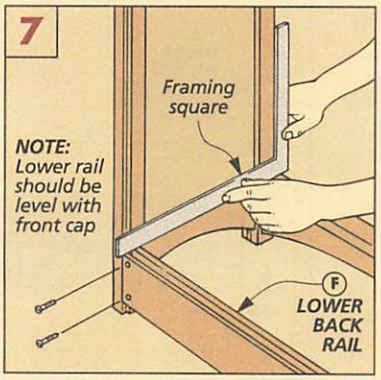


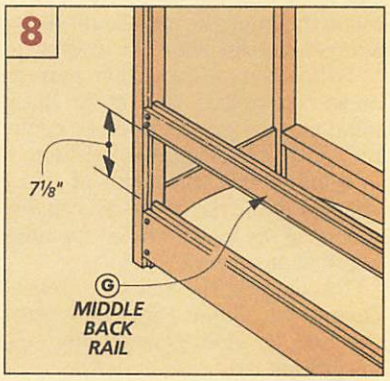

## CASE TOP & SHELF

Now it's time to add a top and a shelf, both 1"-thick panels. There haven't been any solid wood panels used on the wardrobe yet, so there hasn't been a need to worry about the expansion and contraction of the wood from changes in humidity. But now, it has to be taken into consideration. The solution for both the top and the shelf was to use cleats, but they're not used the same way.

**TOP.** I started at the top of the case. At this point there's nothing to attach the top to, so I started by cutting a couple ¾"-thick **top cleats (H)** to fit between the side rails, see Fig. 9. The front cleat will work without any problem, but at the back, the corner posts get in the way. So I notched the corners of the back cleat, see Fig. 9a.

Now to solve the expansion and contraction problem, I drilled some oversize mounting holes, see Figs. 9a and 10a. These holes are also counterbored to hide the round-head screws used to attach the top.

When the holes for attaching the top have been drilled, the cleats can be glued flush with the top of the case, see Fig. 9.

To add the **top (I)**, start out with a 1"-thick oversize panel. Cut it to size (mine was 22" x 46") and chamfer the top and bottom edges, see Fig. 10. When securing the top, it should be centered side-to-side with an ⅛" overhang in back, see Fig. 10a.

**SHELF.** With the top complete, I moved to the shelf. Again, before you make the shelf, there are a couple things to do.

First, when the shelf is installed, there will be a gap between the shelf and the side panels. So I made some **filler strips (J)**, see Fig. 11. These strips are ripped 3" wide and are cut to fit between the corner posts.

After the filler strips have been glued in place, the next step is to cut two hard maple **cleats (K)** for the ends of the shelf to rest on, see Fig. 11. These are simply 1"-wide strips, screwed to the inside of the case.

But positioning these cleats is a little more work than with the top cleats. They have to set back at least ⅞" from the front of the case, see Fig. 11a. And at the back, they must line up with the bottom of the groove on the middle back rail, see Fig. 11.

Once the cleats are in place, the **shelf (L)** can be glued up and cut to size, see Fig. 12. The shelf should be deep (wide) enough so that when it sticks out ⅛" in the front, there's still ¼" that fits inside the pocket in the middle back rail, see Fig. 12b. And like the rail cap that sits below the shelf, all four front edges are chamfered.

When installing the shelf, the cleats work different than the top cleats. Here, I wanted to direct the expansion of the shelf panel into the pocket on the back rail. To do this, I attached the shelf with glue and screws in the front only. The pocket holds the shelf at the back and gives it room to expand.

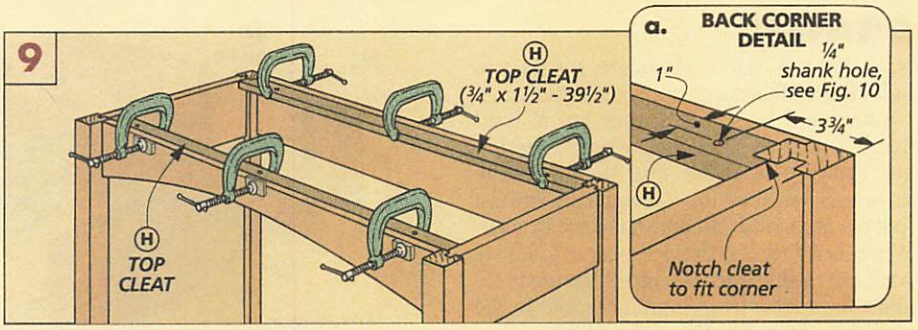


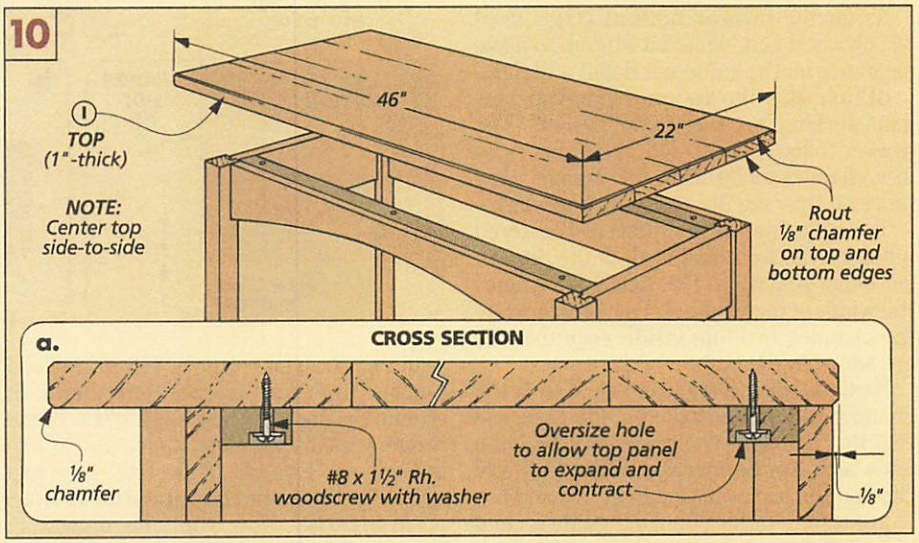


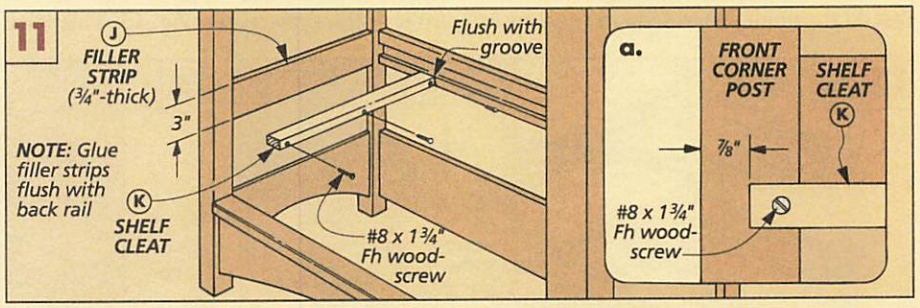


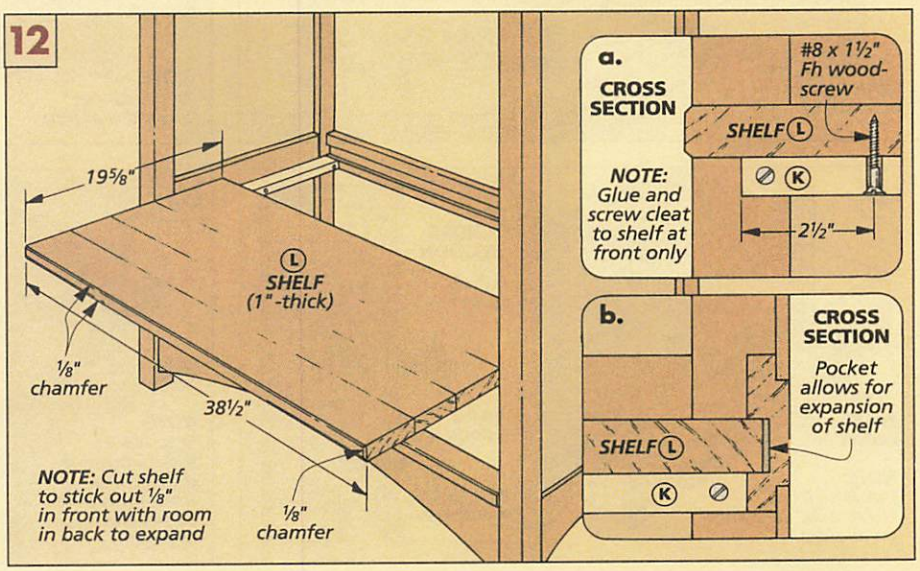

## DRAWER

Now that the case is complete, it's time to build the wide drawer under the shelf.

**DRAWER.** I built this drawer out of hard maple and used a dovetail jig with a ½" bit, see drawing at right. The height of the drawer is based on the dovetails; I wanted a half pin at the top and bottom of the drawer. When building the drawer, size it so it sets back ¾" from the front edge of the posts (to allow for a false front) and has room in the back for a stop, see Figs. 15 and 16.

As for the **drawer bottom (O)**, I used ¼" plywood and located it 5/16" up to allow clearance for the guide, see detail 'a' at right.

**GUIDE.** After the drawer is glued up, I began working on the guide system. The drawer follows a centered guide that rides in a channel underneath the drawer. (For more on this, see the article on page 26.)

To create this channel, first cut a centered notch on the front and back of the drawer, see detail 'b' at right. This notch determines the width of the channel. Then to complete the channel, two thin **guide runners (P)** are added to the bottom of the drawer.

Next, the **guide (Q)** can be cut to fit the channel and then installed in the case, see Fig. 13. To do this, you'll need to rabbet the ends so it can be screwed to the front rail cap and the back rail, see Figs. 13a and b.

**RUNNERS.** At this point, the guide is complete, but the weight of the drawer shouldn't rest on the guide. So to support the drawer, I cut two **drawer runners (R)** to size and notched the back corners so they'd fit around the posts in back, see Fig. 14. These runners are installed 1/16" above the rail cap in front, see Fig. 14a. This creates the gap needed between the rail cap and the drawer.

**FALSE FRONT.** Now with the drawer in place the **false front (S)** can be added to the front of the drawer, see Fig. 15. This false front is cut to fit the opening minus 1/16" on each side for clearance. Simply screw the false front to the drawer so it's centered side-to-side with the bottom edges flush, see Fig. 15a. Then add two cherry knobs.

**DRAWER STOPS.** Finally, to prevent the drawer from stopping against the case back, I glued two small drawer stops to the back corner posts, see Fig. 16.

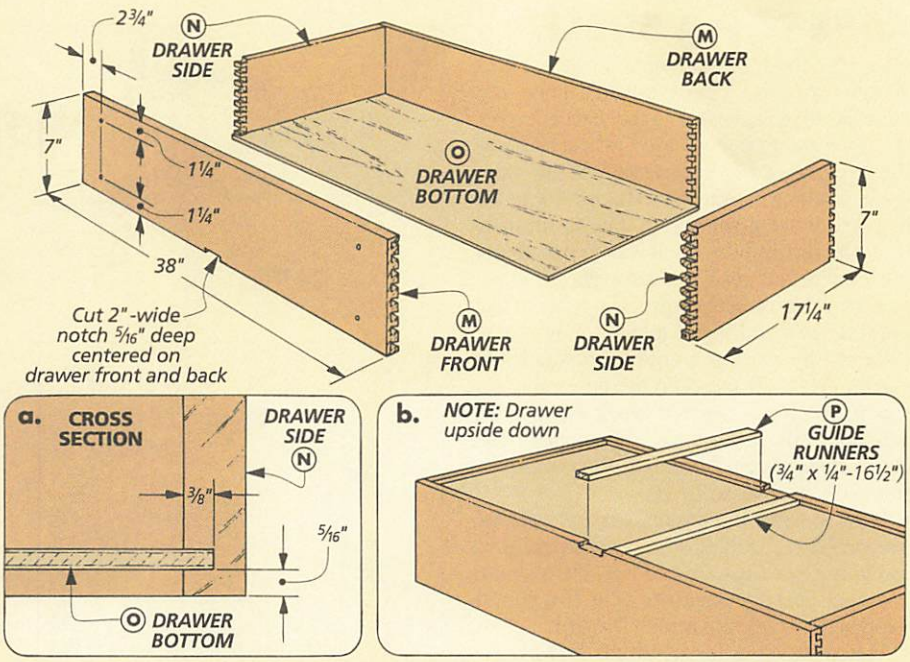


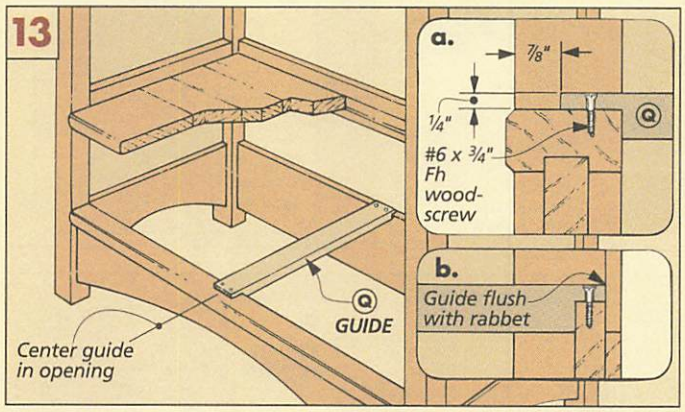


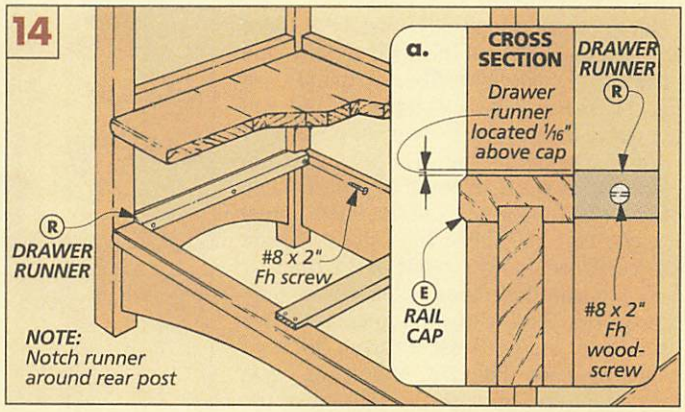


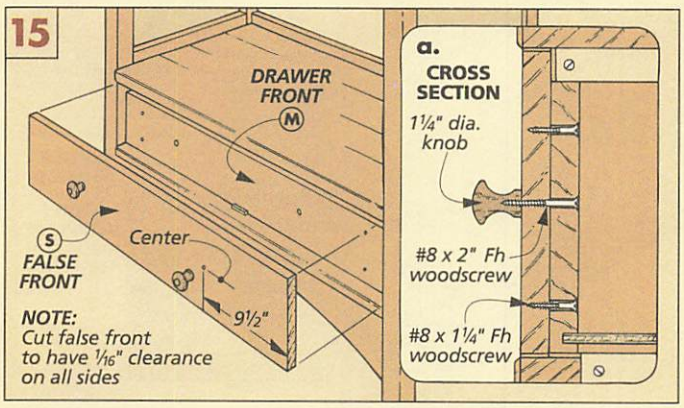


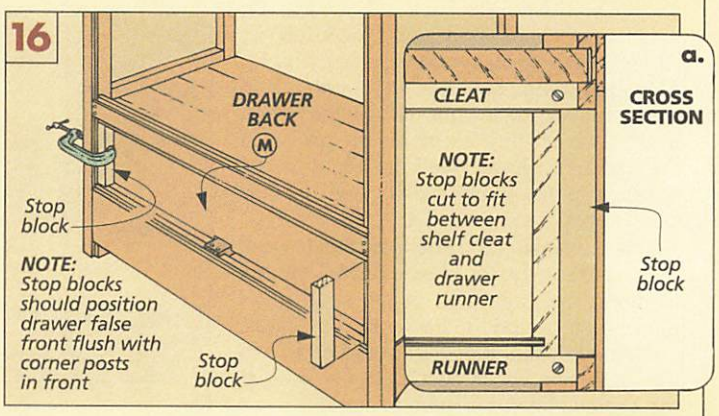

## DOORS

Next, I turned my attention to the doors. Like the sides, the doors are held together with simple stub tenon and groove joinery. And again, the rails and stiles hold panels that are made up of two layers of ¼"-thick plywood. But unlike the sides, these doors have arcs cut on their upper rails.

**DOOR SIZE.** But before actually beginning to build the doors, you need to figure out their overall size.

Since these doors are inset in the case, I made mine ⅛" shorter than the opening to allow for a 1/16" gap at the top and bottom, see Fig. 19a. Then I did the same with the side-to-side measurement. This means that when the doors are built, they'll fit the opening with no gap between the doors. Doing it this way gives me some leeway in case I'm off a little when building the door. I can trim off just what I need to from the inside edges of the doors until there's a perfect 1/16" gap between them to match the gap at the top, bottom, and sides, see Fig. 19b.

I started the doors by cutting both the 1"-thick **stiles (T)** and **rails (U)** to size, see drawing at right. The next step is to cut the stub tenon and groove joints that connect the frame. These are the same joints that were used on the side panels earlier. But there is one difference though. The upper rails have an arc cut along the bottom edge. This way when the doors are closed, these arcs match the arc cut on the lower front rail, refer to Fig. 19.

**UPPER RAIL GROOVE.** Cutting the arc isn't a problem, but the groove in the arc is another matter. You could use a slot cutter bit and a router, but I used a different method. Instead of cutting the groove after the arc, I cut the groove first on the table saw. I made this groove deeper and then left the panels square, see drawing.

To do this, raise the blade to 2" and make a second pass on the upper rails only, see Fig. 17. Then, dry assemble the door frame and cut the **panels (V)** to fit all the way into the grooves.

**ARCS.** Now the arcs can be laid out on the upper rails. To do this, dry assemble the doors and set them side by side, see Fig. 18. Then take the template you used to lay out the arcs on the front rails and draw the arcs. Note: Make sure the groove is ⅜" deep at the narrowest part of the rail.

When the arcs are cut out, the doors can be glued up. Trim them so they fit the case opening with a 1/16" gap all the way around and between the doors, see Fig. 19.

**MOUNT DOORS.** There are a few steps to follow when mounting the doors. First, you need to cut three mortises in each door to hold the hinges. (They should match the thickness of the hinge leaf.) Then when the hinges are screwed to the doors, set the doors in the case on thin spacers to create the 1/16" gap at the bottom of the doors. (I used pennies for spacers.)

Now, transfer the position of the hinges to the corner posts. This time, when cutting the mortises, set the depth so there's a 1/16" gap. Then mount the doors to the case.

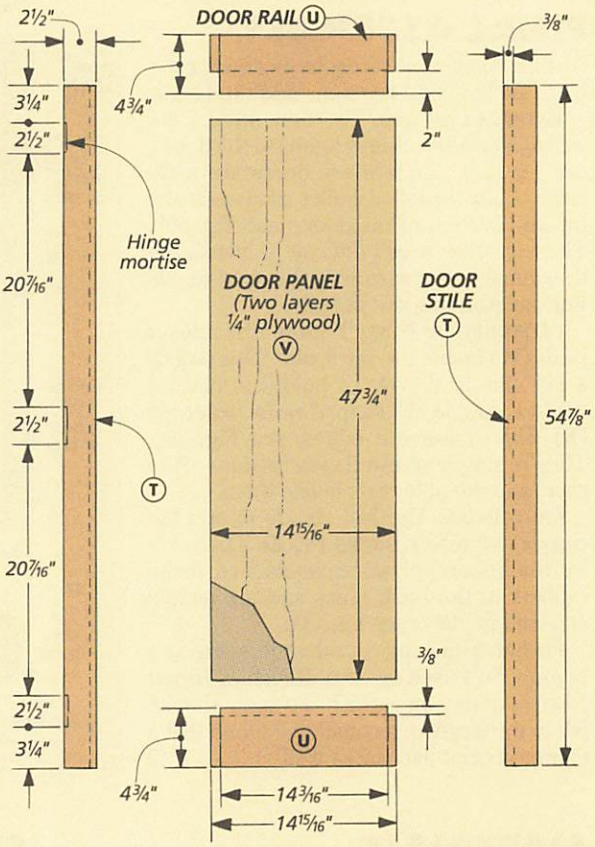


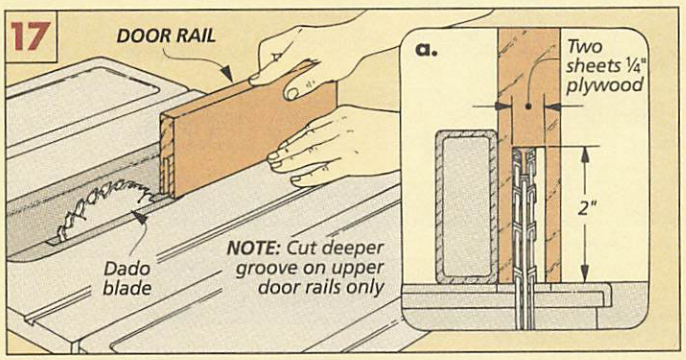


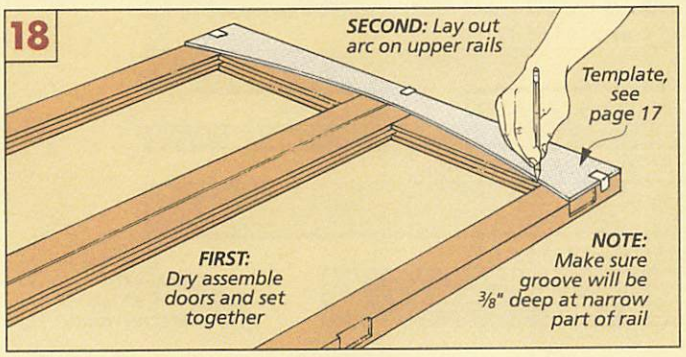


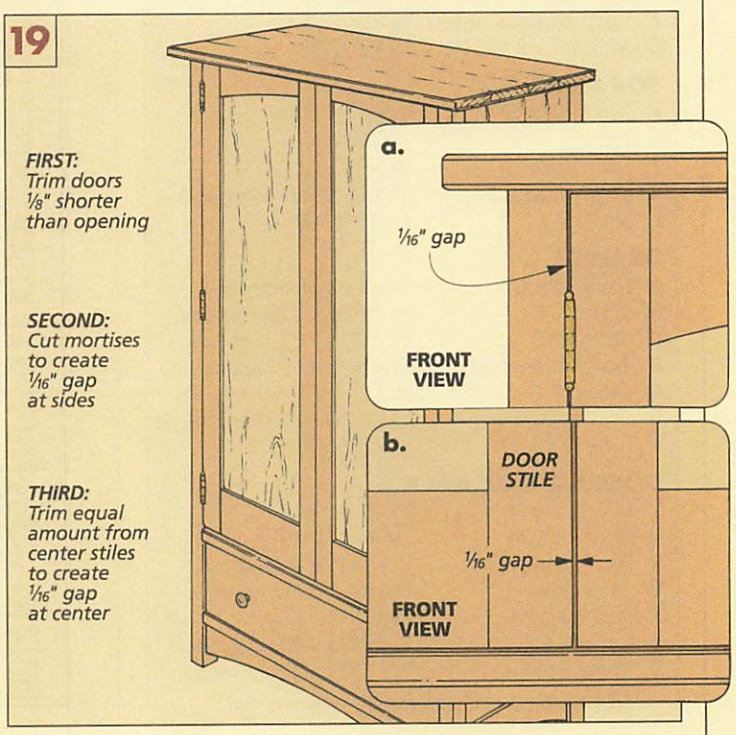

## FINAL ASSEMBLY

At this point, the wardrobe is about complete. All that's left are some odds and ends.

**KNOBS & CATCHES.** The first thing I did was to attach the cherry knobs to the doors, see Fig. 20a. Since these doors are fairly large, I also installed bullet catches at the top and bottom of the doors, see Fig. 20b. These catches aren't difficult to install, but they must be set at exactly the right depth. For more on this see page 28.

**CLOSET POLE.** Next, I hung the **closet pole (W)** inside the wardrobe. This pole is a 1¼"-dia. fir dowel. To hold it in place, I made a couple "U"-shaped **pole brackets (X)** with chamfered edges, see Fig. 20c. They're simply screwed to the insides of the case, and the pole rests inside them.

**CASE BACKS.** The last step is to add the **upper** and **lower backs (Y, Z)**. These are ¼"-thick cherry plywood panels cut to fit the rabbets in the back posts and are simply screwed in place, see Fig. 20d.

**FINISH.** Finishing a project this size is a big job. So I used General Finishes' *Royal Finish*, a wipe-on varnish. To apply the finish to the large areas quickly, I found that a common paint pad works well. ❑

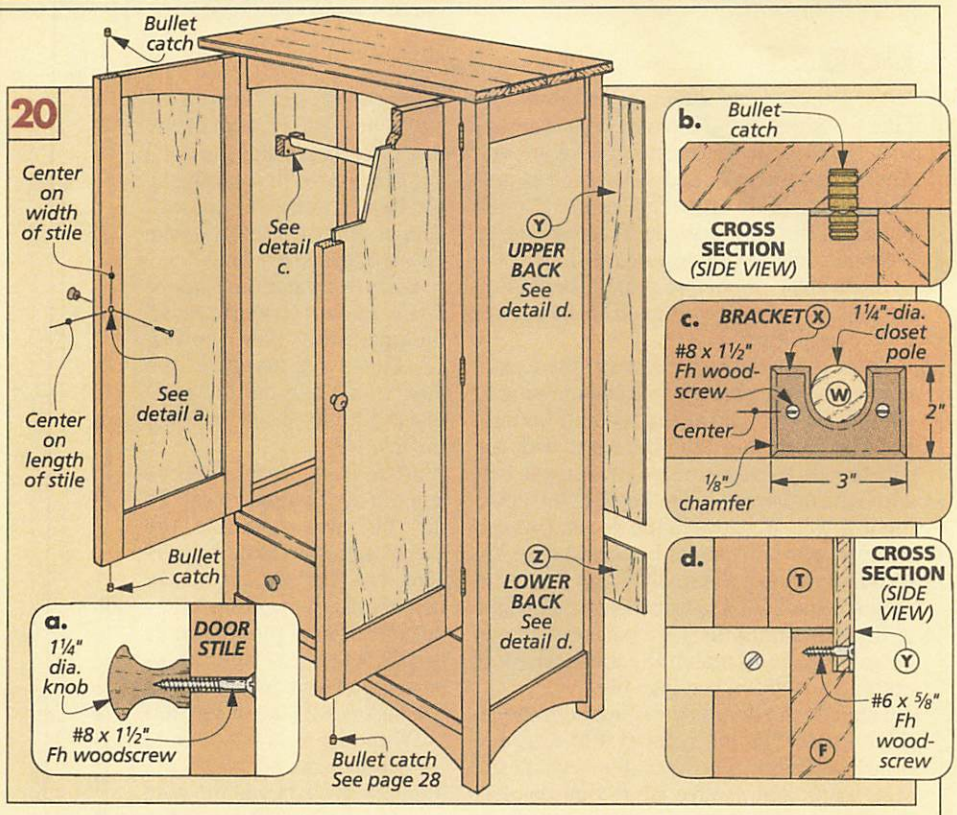


## MATERIALS

| | | |
|---|---|---|
| **CASE** | | |
| A | Corner Posts (4)* | 1¾ x 1¾ - 71 |
| B | Side Rails (4) | 1 x 5½ - 17½ |
| C | Side Panels (4) | ¼ - 17½ x 59½ plywood |
| D | Front Rails (2) | ¾ x 4¾ - 39½ |
| E | Lwr. Front Rail Cap (1) | 1 x 1⅞ - 38½ |
| F | Upr./Lwr. Back Rails (2) | ¾ x 5½ - 39½ |
| G | Middle Back Rail (1) | ¾ x 3 - 39½ |
| **TOP & SHELF** | | |
| H | Top Cleats (2) | ¾ x 1½ - 39½ |
| I | Top (1) | 1 x 22 - 46 |
| J | Filler Strips (2) | ¾ x 3 - 16½ |
| K | Shelf Cleats (2) | ¾ x 1 - 18½ hard maple |
| L | Shelf (1) | 1 x 19⅝ - 38½ |
| **DRAWER** | | |
| M | Front/Back (2) | ¾ x 7 - 38 hard maple |
| N | Sides (2) | ¾ x 7 - 17¼ hard maple |
| O | Bottom (1) | ¼ - 17¼ x 37¼ plywood |
| P | Guide Runners (2) | ¾ x ¼ - 16½ hard maple |
| Q | Guide (1) | ¾ x 2 - 18⅞ hard maple |
| R | Drawer Runners (2) | ¾ x 1½ - 17½ hard maple |
| S | False Front (1) | ¾ x 7⅞ - 38⅜ |
| **DOORS & CASE BACK** | | |
| T | Door Stiles (4) | 1 x 2½ - 54⅞ |
| U | Door Rails (4) | 1 x 4¾ - 14 15/16 |
| V | Door Panels (4) | ¼ - 14 15/16 x 47¾ ply. |
| W | Closet Pole (1) | 1¼ dia. - 39⅜ fir dowel |
| X | Pole Brackets (2) | ¾ x 2 - 3 |
| Y | Upper Back (1) | ¼ - 39½ x 49⅜ plywood |
| Z | Lower Back (1) | ¼ - 39½ x 8⅛ plywood |

*Note: All parts cherry except where noted

## CUTTING DIAGRAM

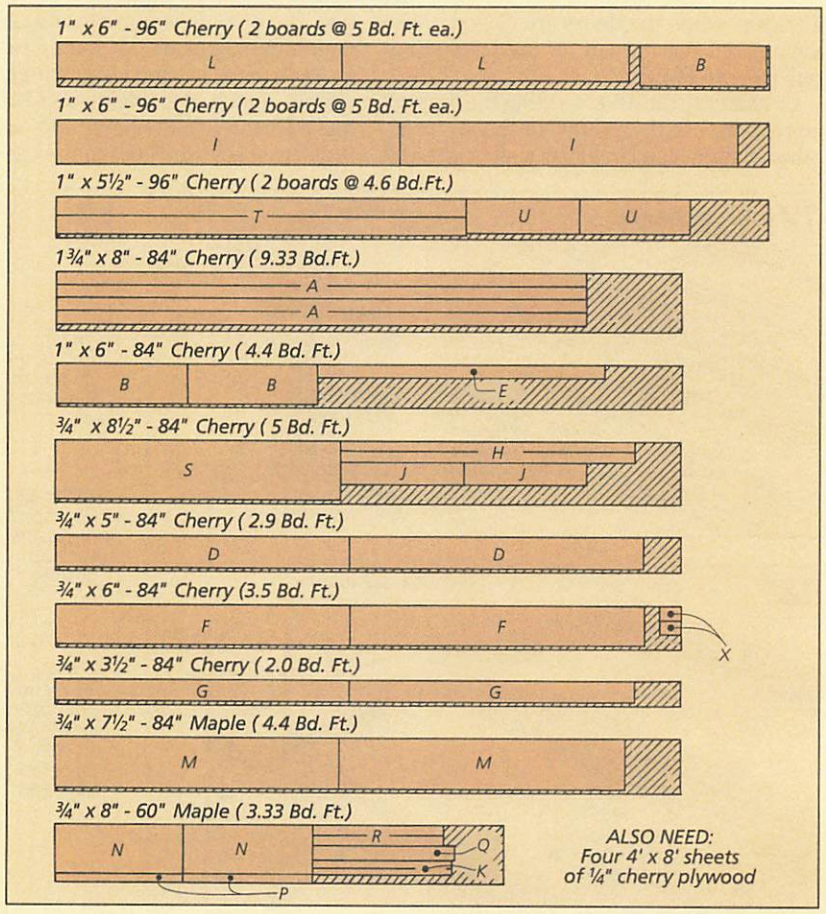

*Optional*

# Inner Case

With the wardrobe completed, I turned my attention to the inner case. This small four-drawer compartment is completely optional. It's built almost entirely from ¾"-thick glued-up panels and will simply slide into the wardrobe.

The height of this case is determined by the drawers, which in turn are determined by the machined dovetails. (Mine were 5¼" tall.) If another method of joining the drawers is used, you can make the drawers as short or tall as you want.

I began by gluing up panels for the **top** and **bottom (A)**, **sides (B)**, and **center divider (C)**, see Fig. 1. Then I cut all the panels to size except the center divider. It will be cut to fit inside the case later.

The next step is to cut ¼"-deep rabbets on the ends of the sides to hold the top and bottom panels, see Fig. 1b.

The center divider is set in a dado cut across the top and bottom panels, so I cut these dadoes next, see Fig. 1a. And to hold the ¼"-thick plywood back, I cut a ½"-wide rabbet on the top, bottom, and side panels, see Fig. 1c.

When the rabbet for the back is cut, dry assemble the case and cut the divider to fit between the grooves in the top and bottom, see Fig. 1. Then rip it to width so it's flush with the front of the case and stops at the shoulder of the rabbet for the case back.

At this point, the inner case can be glued and screwed together, see Fig. 2. The center divider is simply glued in place because I didn't want screws visible from the top of the inner case. Then when the glue's dry, you can cut a **back (D)** to fit the rabbets and screw it in place, see Fig. 1.

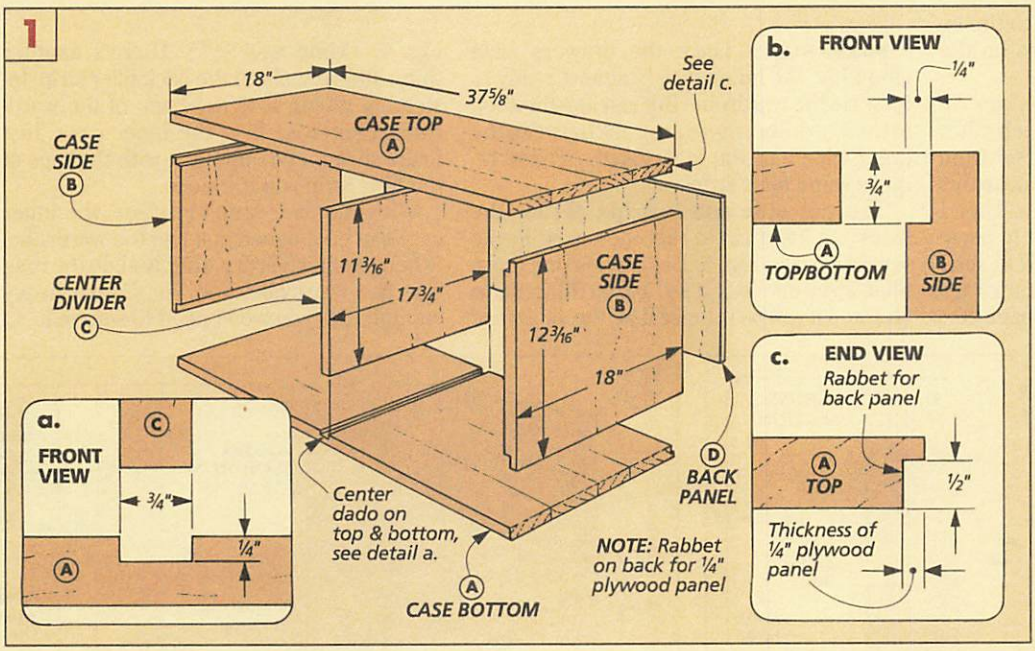


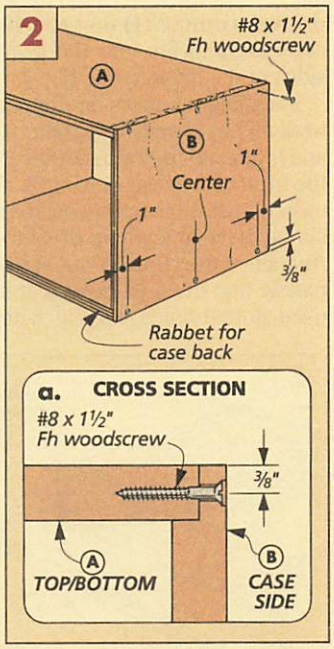


## MATERIALS

| | | |
|---|---|---|
| A | Top/Btm. (2)* | ¾ x 18 - 37⅝ |
| B | Sides (2) | ¾ x 18 x 12 3/16 |
| C | Center Divider (1) | ¾ x 17¾ - 11 3/16 |
| D | Back (1) | ¼ - 37⅝ x 11 7/16 plywood |
| E | Drawer Fronts (4) | ¾ x 5¼ - 17 15/16 |
| F | Drawer Backs (4) | ¾ x 5¼ - 17 15/16 hard maple |
| G | Drawer Sides (8) | ¾ x 5¼ - 16¾ hard maple |
| H | Drawer Btms. (4) | ¼ - 16¾ x 17 3/16 plywood |
| I | Drawer Runners (8) | ¾ x 7/16 - 17 hard maple |
| J | Side Filler Strips (2) | ¾ x 3 - 16½ |
| K | Back Filler Strip (1) | ½ x 3 - 38⅜ |

*Note: All parts cherry except where noted

Also Needed: One 12" x 48" piece of ¼" plywood

## CUTTING DIAGRAM

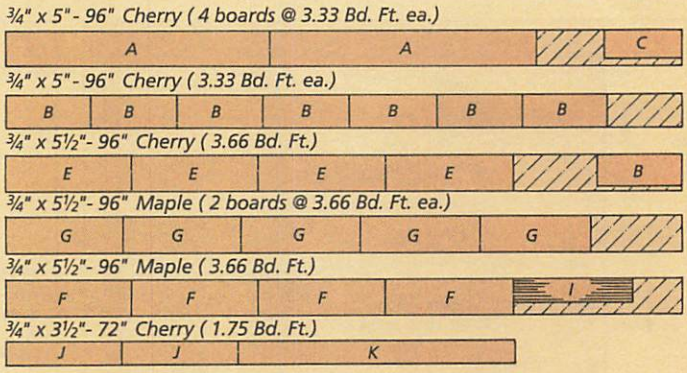

## DRAWERS

Now that the inner case is complete, all that's left is to add the drawers.

**DRAWERS.** To determine the height of the drawers, measure the opening and subtract 3/16" for the gaps at the top and bottom and between the drawers. Then divide this number by two. (Mine were 5¼" tall.)

With the pieces cut and the dovetails routed, next cut the openings for the handles on the drawer fronts, see Figs. 3 and 3c.

Shop Tip: After the handle was cut out of one drawer front, I used it as a template for marking the other fronts.

With the handles cut, the drawers can be assembled. Then rout a stopped groove along the sides of each drawer, see Figs. 3a and b. This groove is centered on the side pieces and is part of the drawer runner system, see page 26. (For some tips on cutting this stopped groove, see page 29.)

**RUNNERS.** Now the four drawers can be installed in the case. This means cutting a **drawer runner (I)** that attaches to the inner case and fits into the grooves on the sides of the drawer, see Fig. 4.

Installing runners in the case can be tricky. They have to be parallel to each other and level, and they must be located ¾" from the front of the case, see Fig. 5. To make this easier, I set the runners on spacers. Then I simply have to position them front to back. And since the runners are screwed to solid panels that need to expand and contract, I used slotted holes, see Fig. 5 and page 26.

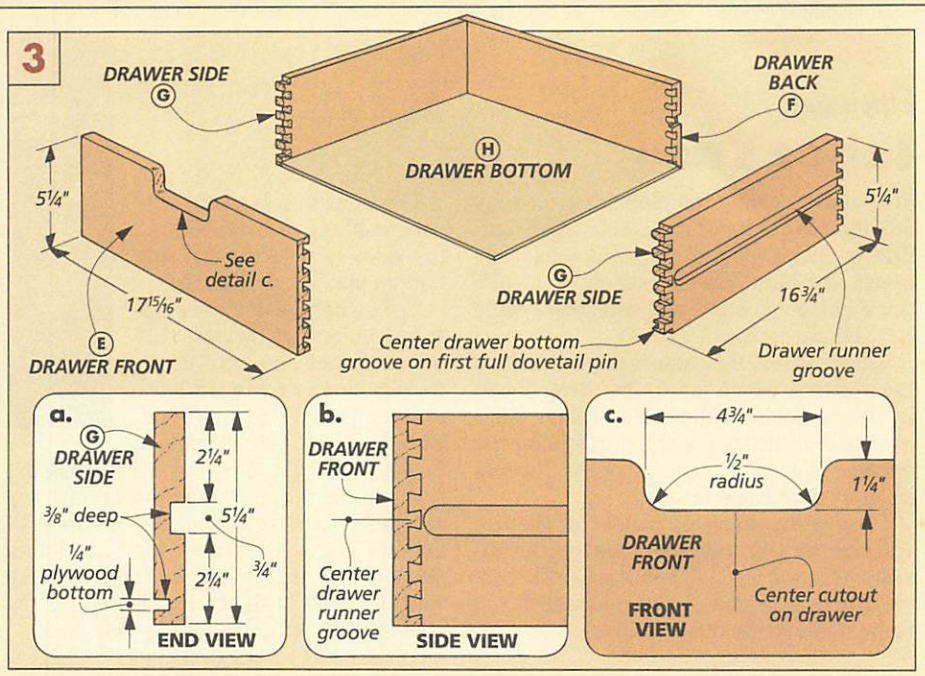


**FILLER STRIPS.** Once the drawers slide smoothly, the inner case is almost ready to be set in the wardrobe. But just like the shelf in the wardrobe, there are gaps between the inner case and the side panels. These require some filler strips.

The two **side filler strips (J)** for the sides are identical to the ones used in the wardrobe, see Fig. 6. But there's one more filler strip needed. It's a **back filler strip (K)**, and it will be thinner than the sides, see Fig. 7. (Mine was ½".) There's another thing different about the back filler strip. Instead of gluing it to the back of the wardrobe, I screwed it to the inner case. Just make sure it ends up flush with the tops of the filler strips on the sides.

With the filler strips in place, the inner case can be finished just like the wardrobe. When the finish is dry, simply slide the case into the wardrobe, see Fig. 7. It's heavy enough that you won't need to secure it. ❑

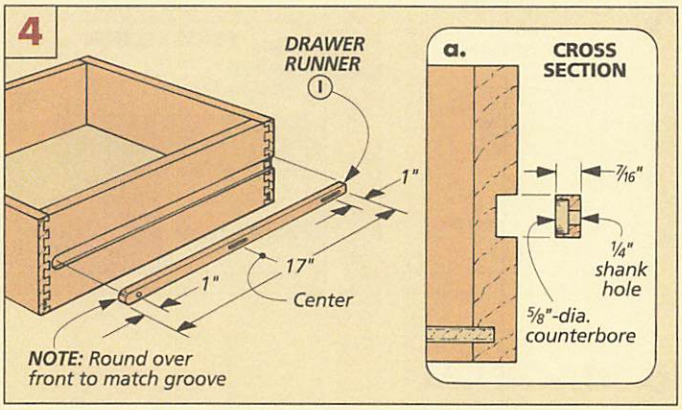


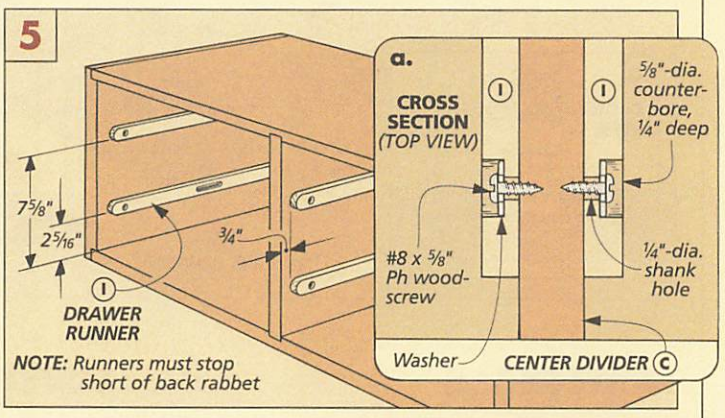


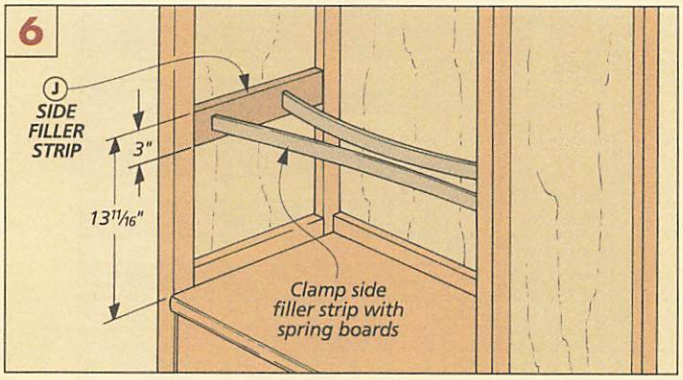


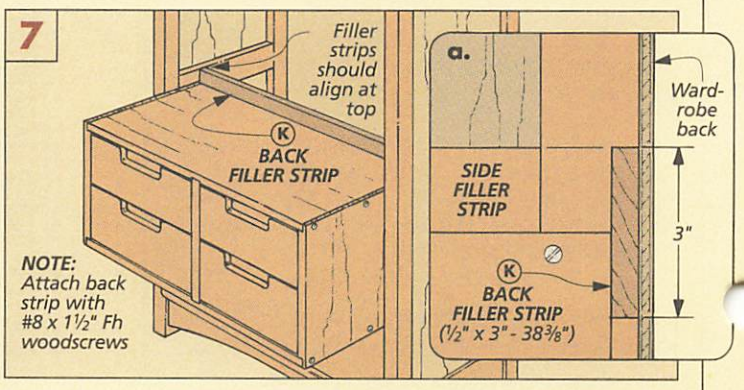

# Drawing an Arc

*Here's a simple jig sent in by a reader that makes drawing arcs foolproof. All you need are four nails and a couple scraps.*

When it's time to lay out an arc (especially large ones like those used on the wardrobe on page 6), you practically need a degree in mathematics to calculate the radius. But **Ben Rickey**, of Arlington, Virginia, came up with an easier solution. He sent in a simple jig to draw perfect arcs. And the beauty of it is, you don't need to use any math at all.

Ben's jig is a couple of strips of wood and a few finishing nails. But the secret to making it work is where you place the nails.

**LAYOUT.** To find the location for the nails, you need a few layout lines to mark the length, height, and center of the arc, see Fig. 1. I drew these lines on a piece of hardboard (Masonite) so it could be used as a template. They could be drawn right on the workpiece, but you'd be left with nail holes.

Once the layout lines are drawn, four finishing nails can be driven into the hardboard at points 'A', 'B', 'C', and 'D', see Fig. 1. These nails serve two purposes. First, they're used to help construct a sliding arm (the two strips of wood), see Fig. 2. Second, they guide the arm when drawing the arc.

**SLIDING ARM.** To construct the sliding arm, lay the wood strips against nails 'A', 'B', and 'C', see Fig. 2. Where the strips overlap, join them together with a little glue and a few short brads, see Fig. 2a.

Now cut off the "ear" from the overlapping end of each strip and make a small notch on the outside corner where the pieces intersect, see Fig. 2b. This holds the point of your pencil when you use the jig.

But before you can draw the arc, nail 'C' has to be removed, see Fig. 3. It gets in the way when using the sliding arm.

**USING THE JIG.** To use the jig, hold the arm against nails 'A' and 'B' and slide the arm along the nails to draw the first half of the arc. When one half is complete, simply move the sliding arm against nails 'B' and 'D' and finish the arc, see Fig. 4.

A band saw or a sabre saw can be used to cut out the arc. Then to smooth the edges, I sanded them by hand with a sanding block, see the tip on page 29. ❑

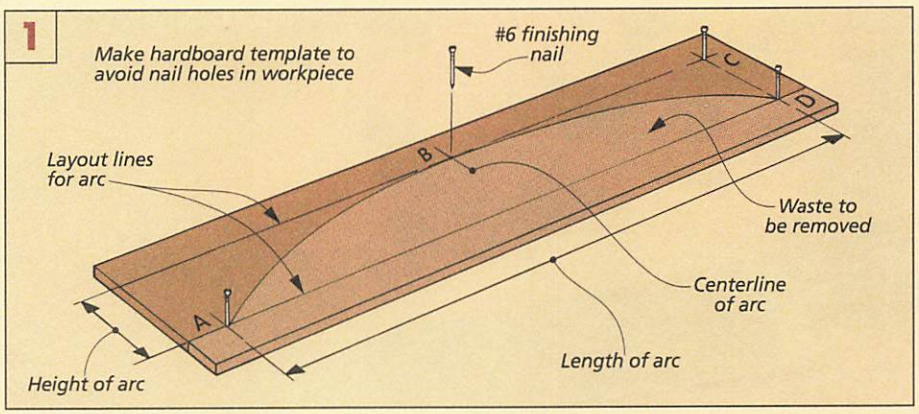


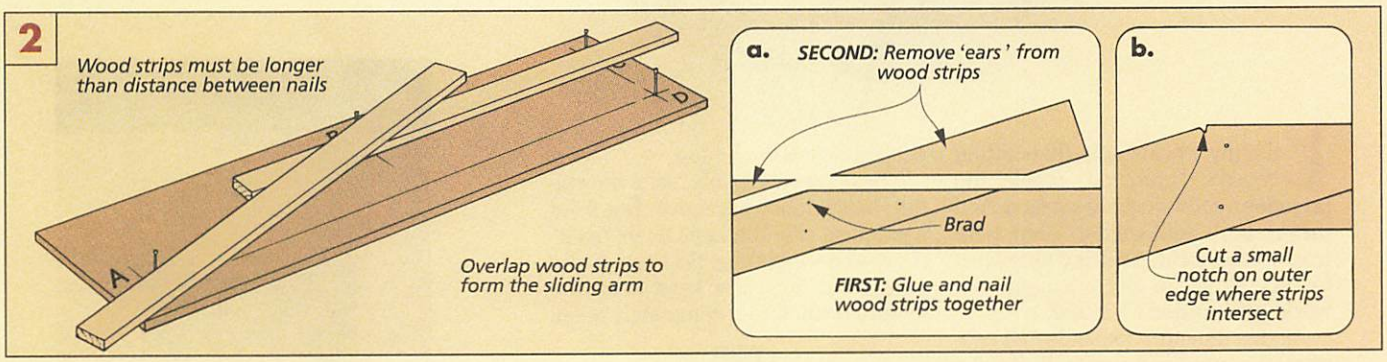


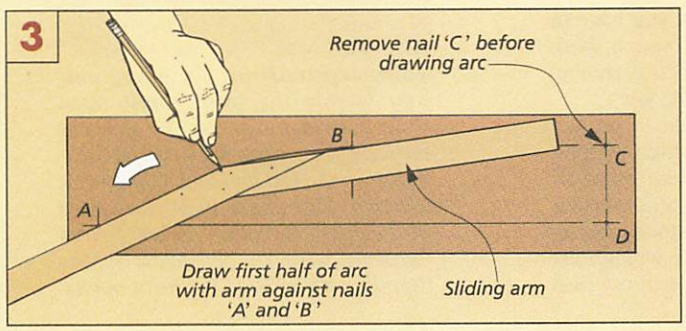


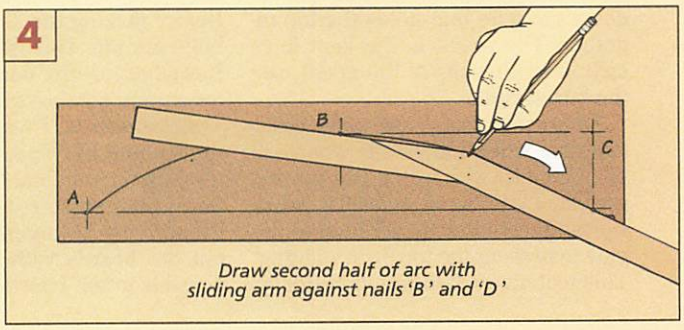

# Cutting Board

*The butterfly-shaped keys on this cutting board look great, and they lock the boards together to prevent the ends from splitting.*

Like my workbench, this cutting board's laminated, maple top provides a solid working surface. And they're both built solid to keep them from rocking. But a cutting board has to "stand up" to one element that workbenches don't – water.

All this moisture expands and contracts the wood and eventually breaks down the glue that holds the top together. The result is the joint lines split open (usually at the ends), see the box at right.

To prevent this, I use water resistant glue when I know the wood will be in contact with water. But for this project, I combined a special woodworking technique in addition to the glue to prevent the top from splitting. This technique is to install butterfly-shaped keys into the top.

These keys certainly make the cutting board more attractive. But from a practical side the keys tie or "lock" the pieces together. So even if the glue bond fails, the keys keep the joints from splitting completely open.

## TOP

Before making the keys, you have to build the top. This isn't complicated. Just edge glue five boards together after cutting notches for the keys.

**SIZING STOCK.** I wanted to reduce the amount of chipout when planing the boards to a final thickness of 1". So I spent some extra time sorting through my 5/4 maple stock picking out the boards with the straightest possible grain. I used five of my best

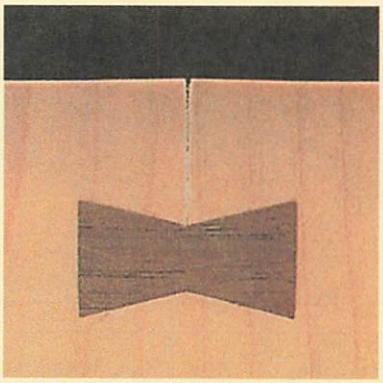

***Joint separation.*** *On many cutting boards the joints split open from excess moisture. To prevent the joint from opening completely, a dovetail-shaped key locks the pieces together. The strength of the key is in the grain direction. Since it runs perpendicular to the grain in the top, it won't split as the joint opens.*

pieces to make up the 11¼"-wide x 16"-long top, see drawing at right.

It's also a good idea to make a couple extra pieces. They come in handy later as test pieces. Note: To ensure tight joint lines when the pieces are glued together, make sure the edges are smooth and square.

**NOTCH LAYOUT.** With the stock planed to size, the next step is to shuffle the pieces so the best face is up. Later, these pieces are paired together so a pair of dovetail-shaped notches (one at each end) can be cut into the mating edges. Each notch forms a butterfly-shaped opening for a key to fit into.

It can get a little confusing cutting all these notches. Especially since the three pieces in the middle have notches cut on both edges. So to help keep track of everything, I numbered each of the mating edges, see drawing at right. Unless you like working jigsaw puzzles, this makes it easy to get all the edges realigned with each other after they've been routed.

**ROUTING NOTCHES.** With the pieces numbered, the dovetailed notches can be routed next. A simple way to do this is with a ½" dovetail bit in the router table. But there's a small problem. Trying to make a full-depth cut (7/16") with a dovetail bit can cause the workpiece to shift in the middle of the cut. So instead of starting with a dovetail bit, I used a ¼" straight bit and left about 1/16" for the dovetail bit to clean up, see Fig. 1a.

I also added an auxiliary fence and stop block to the miter gauge. This way, the workpiece can be securely clamped to the fence to keep it from shifting. And the stop block keeps all the boards in perfect alignment with each other so the notches all end up in the same location. Note: See the box below for an alternate method of cutting the notches without a miter gauge.

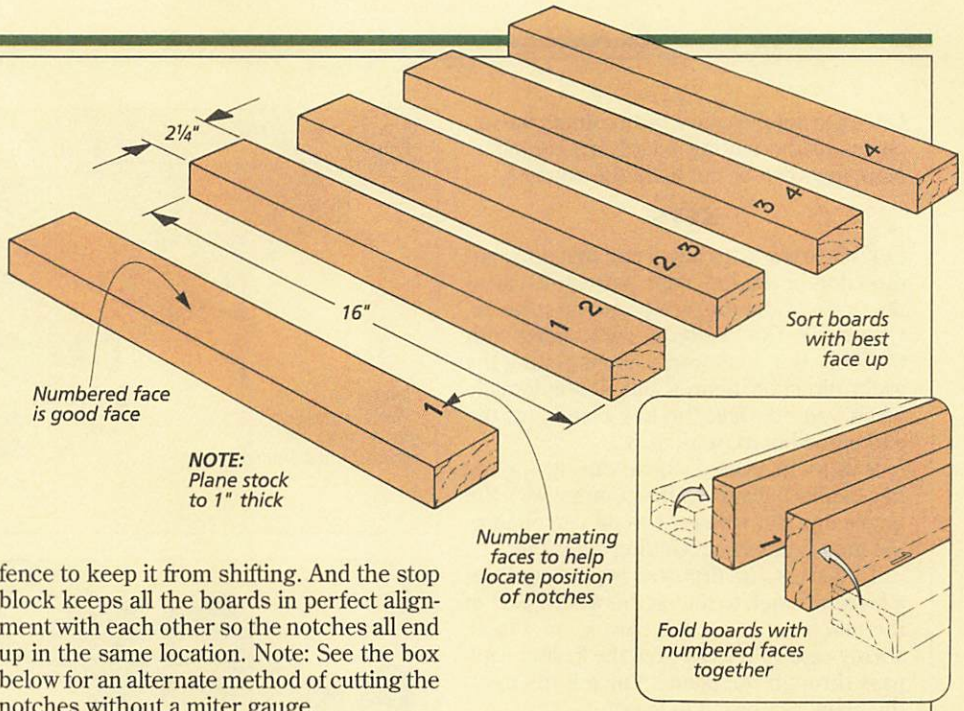


Note: The test pieces also need this notch routed. They'll come in handy later when setting the depth of the dovetail bit.

One trick that I use when routing these notches is to rout two pieces at the same time. This is where the numbered faces really help. Simply *fold* two pieces together, number to number, and rout a notch in both pieces, see Fig. 1 and detail at right. There's a couple advantages to doing this. First, the notches will be aligned perfectly with one another. And second, there's less chance for chipout on the good faces.

Start by removing the waste from the notch at one end. Then rotate the workpiece 180° and rout the other end. Note: When using a ¼" bit to remove waste, make a couple of passes to reach the final ⅜" depth.

With the waste removed, the dovetail bit is installed in the router, see Fig. 2. I used a test piece first to check the dovetail bit depth. And I set mine to cut 7/16" deep, see Fig. 2a. Then rout the dovetail-shaped notch in all the pieces. Here again I paired-up the mating boards and cut the notch in both pieces at the same time.

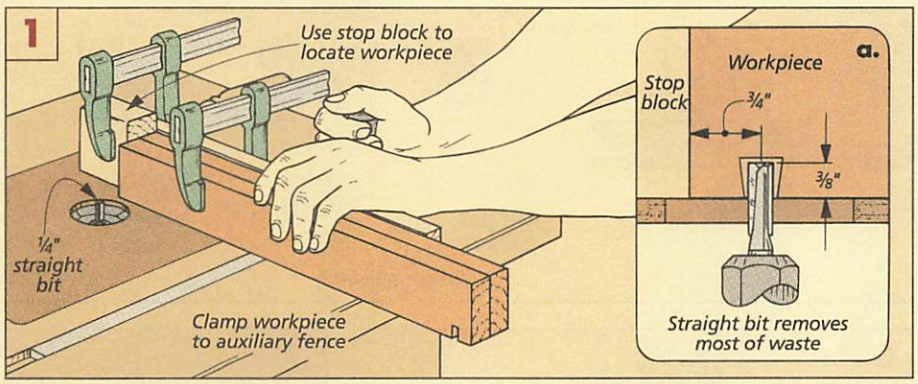


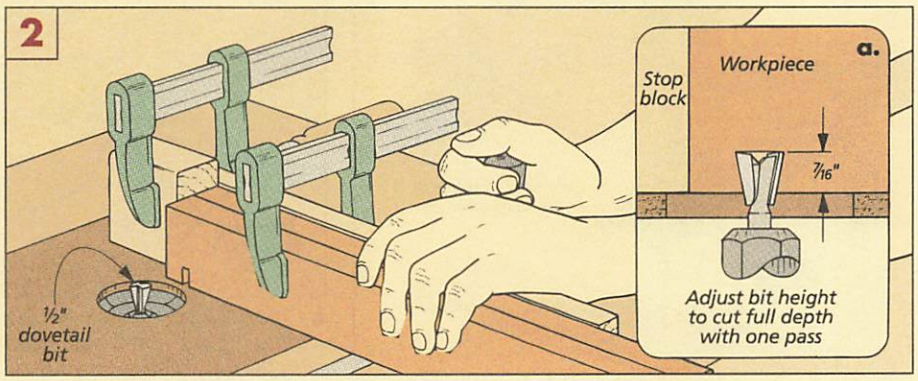


## ALTERNATE METHOD

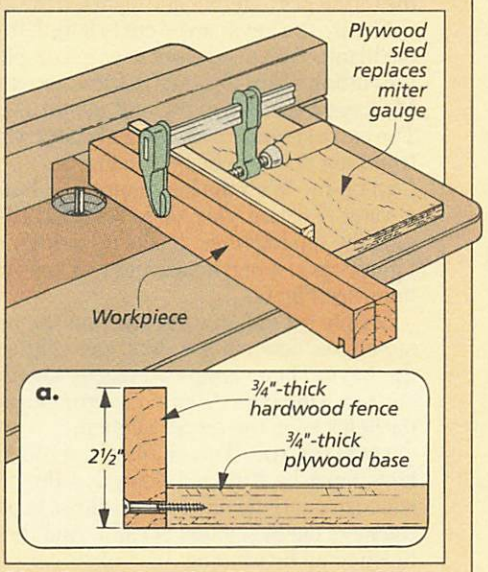


***Notch-cutting jig.*** *You don't need to use a miter gauge to rout the notches for the keys. A small piece of plywood with an attached fence will do the same thing.*

Once the notches have been routed, the top pieces of the cutting board are complete. Now, keys can be cut to fill the notches.

## KEYS

For this to work, it's important that the grain direction of the key runs perpendicular to the grain of the top, see photo on page 18. Otherwise, the key splits right along with the joint. But don't worry about getting the grain direction figured out. It's automatic when you crosscut the key blanks off the end of the board, see Fig. 3.

**MAKING BLANKS.** I chose cherry for my key blanks because of the contrast with the maple top. But whatever wood you choose, the goal is the same. Getting a tight fit.

To do this, the first step is planing down a piece of stock to match the widest part of the notch cut in the top pieces, see Fig. 3. (In my case ½".) I checked the fit after each pass through the planer. Once it fits tight, the blank can be cut to length.

The length of the key matches the height of the opening created by the paired notches. This opening is ⅞" on my pieces, so my keys are this length. Note: It's a good idea to cut extra blanks for setup pieces.

**SHAPING KEYS.** Now all that's left is to cut the butterfly shape. Unfortunately my router table wasn't setup for these small pieces. So I added an auxiliary table with a smaller hole for the bit, see Fig. 4. And for safety, I used a push block to rout the pieces, see Fig. 4a. (For more on this auxiliary table refer to page 29.)

With the bit set to cut 7/16" deep, I made a shallow cut on all four sides of the blank, see Fig. 5. Then to check the fit, I dry clamped the top pieces together and inserted the key.

Finally, the keys can be cut to length from the blanks. You need eight keys to complete the cutting board top, but I made a few extra. My keys were also extra long (about 1½"). The extra length comes in handy later when trimming the keys flush, see Fig. 3.

**GLUE-UP.** With the keys complete, I used a water-resistant glue (like Titebond II) to glue the top together. It sets up quickly, so I glued-up just one board and two keys at a time, see Fig. 6.

Simply spread an even layer on the mating edges, down in the slots, and a little on the keys. Then clamp two pieces together and tap in the keys. Note: A clamp in the center helps keep the pieces aligned.

**LEVELING TOP.** To complete the top, the keys must be trimmed flush and the glue squeeze-out removed. I used a chisel to pare the keys flush, see box at right. And then I finished up by sanding.

## FEET

With the top sanded, you could stop here and have a perfectly usable cutting board. But instead, I added feet. They raise the cut-

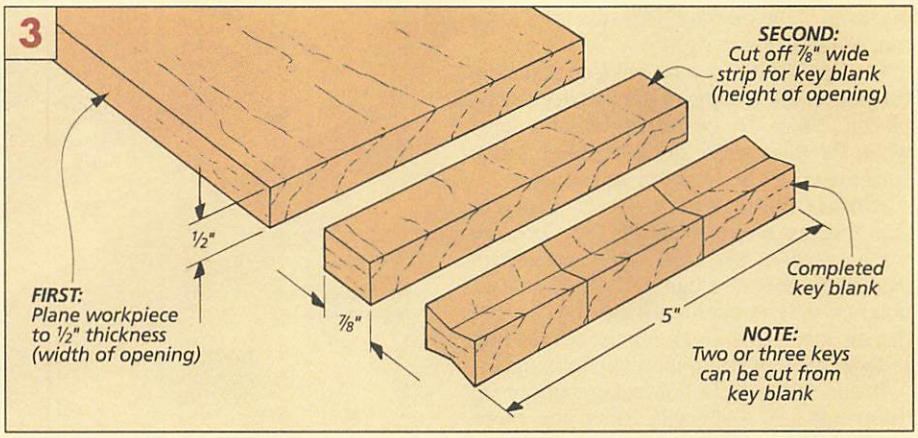


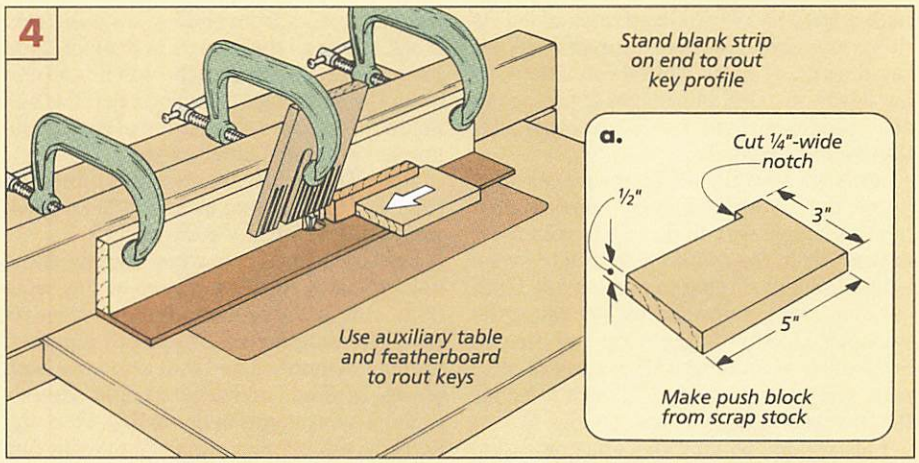


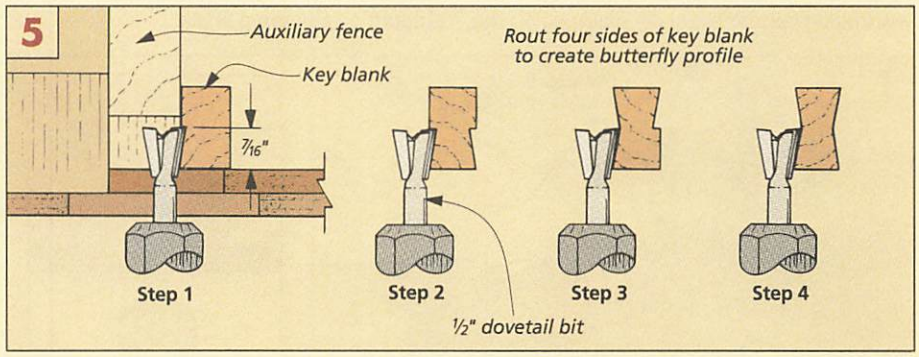


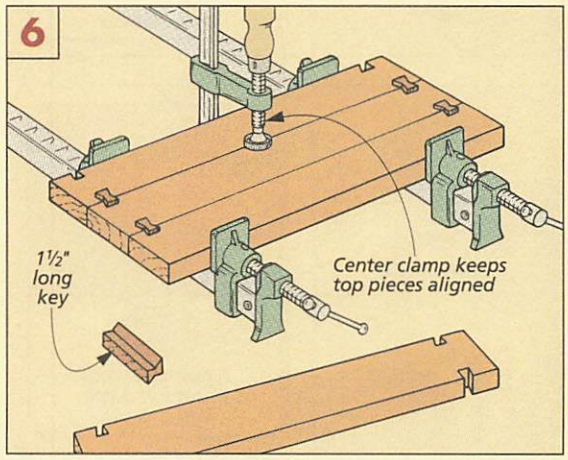


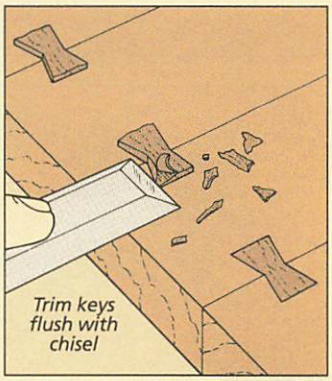


▲ *Carefully pare aware the key with a chisel until it's flush with the top. Then sand smooth.*

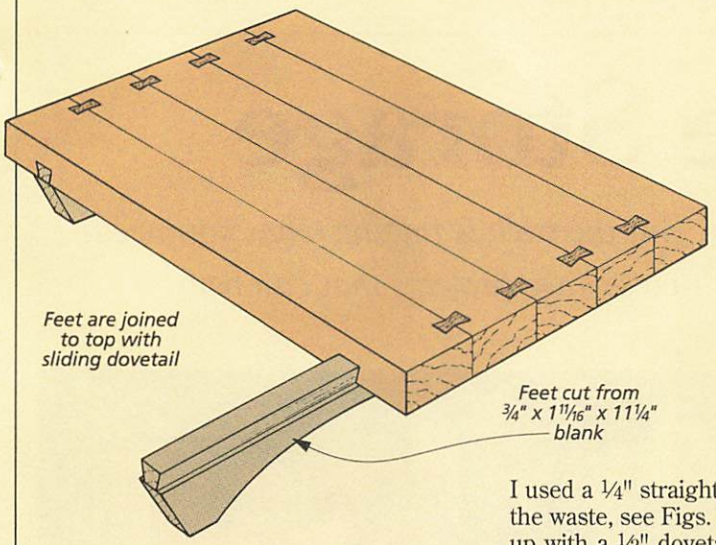


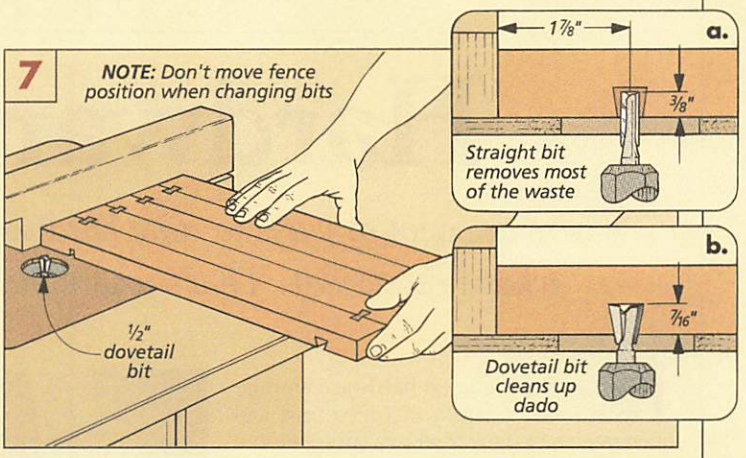


ting board up and make it easier for me to pick up and move around.

What's special about these feet is they're attached to the top with a sliding dovetail joint. This helps keep the top from cupping. And because they're pinned in the middle, not glued, the wood can still move.

**FEET BLANKS.** The feet start out as ¾"-thick cherry blanks cut to finished size (1 11/16" x 11¼"), see drawing above. Note: An extra blank (or two) is helpful when sizing the dovetail tenon cut on the top edge.

**ROUTING DADOES.** Each of the tenons cut on the blanks fits into a long, dovetail-shaped dado in the bottom of the cutting board. Like routing the notches for the top, I used a ¼" straight bit to remove most of the waste, see Figs. 7 and 7a. And followed up with a ½" dovetail bit to finish up, see Figs. 7 and 7b. Note: After completing the dadoes, don't change the bit height. It's used next to rout the tenons on the feet.

**ROUT TENON.** To rout this "tenon" simply run the blank past the bit taking a light cut off each side, see Fig. 8. The goal here is to get a tenon that fits in the dado and slides smoothly. Since the bit height wasn't changed, the only adjustment necessary is to move the fence to change the width. Note: When checking the fit in the top, don't push the feet in too far. They can be almost impossible to get back out.

**TAPER.** Once I'm satisfied with the fit, the ends are tapered next. Simply adjust the miter gauge to 30° and make your cut, see Fig. 9. The taper cut should intersect with the base of the tenon, see Fig. 9a.

**ARC.** Finally, to complete the feet, an arc is cut on the bottom edge. This creates a small pad at each end to help the cutting board sit solid. The simplest way to lay out this arc is to use a piece of hardboard (Masonite) and bend it into an arc shape, see Fig. 10. This is a three-handed operation, so while you hold the hardboard, have someone trace along the edge. Then use a band saw to cut out the arc and sand up to the line.

**ASSEMBLY.** Now the feet can be installed in the top. To hold them securely, they're pinned in the middle with a ¼"-diameter dowel, see Fig. 11.

Simply slide in the feet so the ends are flush with the top. Then drill a hole to match the dowel length and glue it place. ❑

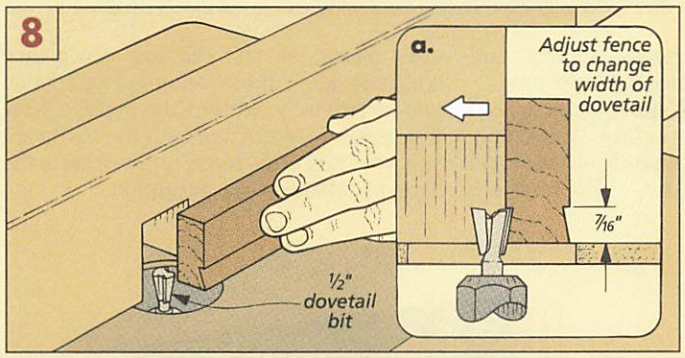


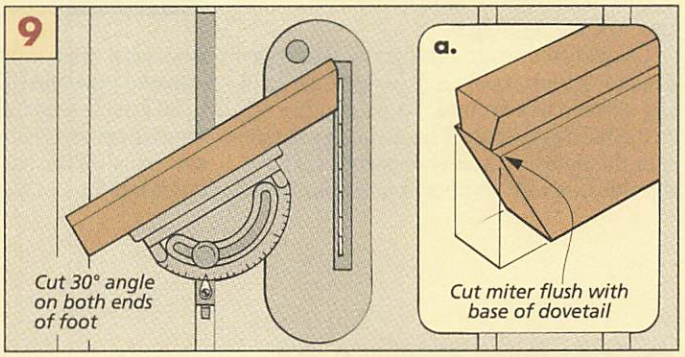


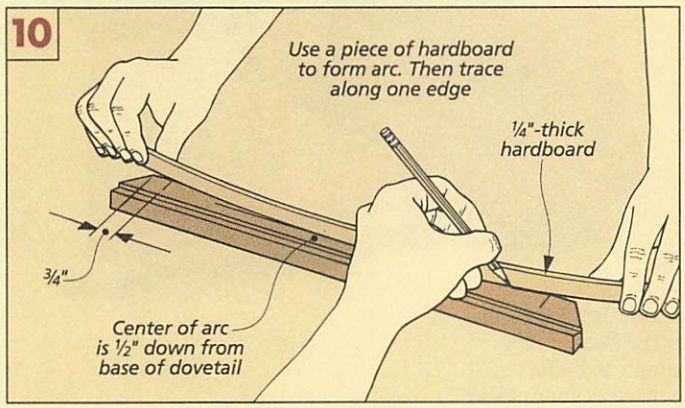


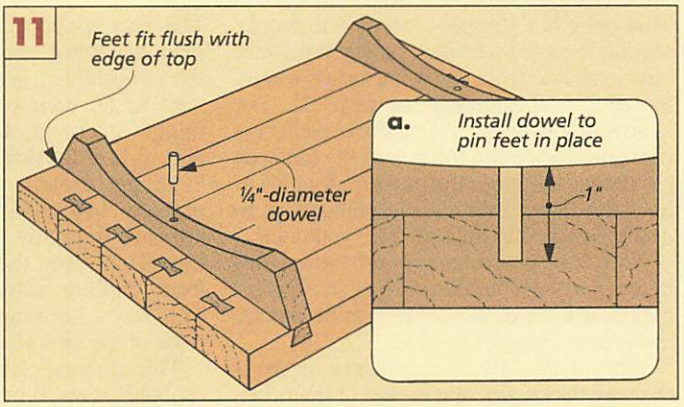

# Hardware Storage

*There are a lot of ways to store hardware. But the trick is finding what you need when you need it. That's where these two storage projects that can help.*

I used to think a good hardware storage system was a bunch of coffee cans and mayonnaise or baby food jars sitting on the workbench. And an "organized system" consisted of dumping all the screws in one can or jar and all the nails in another.

But after a fruitless 20 minute search to find 10 screws all the same size, I knew there had to be a better way. So on my next trip to the hardware store, I came home with a dozen plastic storage bins that stack one on top of the other.

I filled each bin with a different type of hardware and stacked them up in two columns to save space. I soon found out the laws of gravity still apply whenever I tried to get anything stored on the bottom. That's what inspired this open bin storage project.

It's designed to use minimal space on the workbench (they're stackable). And since each bin is like a little drawer, it's easy to pull them out and get at what you need, see photo. I thought these bins solved my storage problems until I had a home fix-it project that needed tending to.

I quickly found out that carrying the open bins to the job wasn't any better than hauling coffee cans around. So on another trip to the hardware store, I happened to wander into the sporting goods department. Here, a tackle box with another smaller box inside (the kind that holds hooks, sinkers, and swivels) gave me the idea for a tool tote.

So I made a portable storage unit to hold six of these small boxes or trays. You simply sort out all of the same type of hardware and put it into one of these trays. The trays are clear plastic, so you can see at a glance what's inside. And it swings closed when you carry it to "lock" the trays in place. Now it's easy to load the tote with the hardware you need and avoid those return trips to the shop for whatever was forgotten.

## OPEN BIN STORAGE

This open bin storage system is a simple, stackable case that holds plastic hardware bins available from most hardware stores, for additional sources, see page 31. The beauty of this design is that the organizer is constructed around the size of the bins you purchase. Although the one I built holds 4" bins, the dimensions of the organizer can be easily changed to hold the size you need.

Note: It's a good idea to purchase the bins before you start building the organizer. This makes it a lot easier to determine any dimensional changes needed.

What makes these organizers useful is the way they stack one on top of the other. This way, as your surplus hardware grows, the organizer grows with it. Of course, as things stack up, they also want to fall down.

To get around that problem, two small feet are added to the bottom. They keep the case from shifting side-to-side. This way a light bump won't spill the contents of the bins all over the floor.

This organizer is so simple to build, you'll probably want to make three or four at the

same time. They're simply two ½"-thick side pieces, with a ½"-thick bottom, and a ¼"-thick piece of hardboard (Masonite) glued on the back to add strength.

**SIDES & BOTTOM.** I began construction of the workbench organizer by cutting the **sides (A)** (4¾" x 5½"), then the **bottom (B)** (4½" x 13¾") to finished size, see Fig. 1. What's a little unusual here is the sides are wider than the bottom by ¼". The reason for this difference is there's a rabbet cut in the back edge of the side pieces, see Fig. 1a. Later, the hardboard back will fit into this rabbet to help strengthen the sides.

Next, a ¼"-wide dado is cut on the bottom of the side pieces, see Fig. 1b. This is the first half of a tongue and groove joint used to join the case together.

With the sides complete a ¼"-long tongue is cut on both ends of the bottom piece, see Fig. 1c. This tongue is sized to fit the dado already cut in the sides. Now to complete the bottom, a pair of ¼"-wide dadoes are cut on the inside face, see Fig. 1d. These shallow dadoes hold two hardboard dividers added later.

Note: An easy way to cut these dadoes so they end up evenly spaced is to use the rip fence for a stop. With the fence set, make your first cut, then rotate the workpiece end-for-end and make your second cut.

Finally, the sides and bottom can be glued together. Simply glue and clamp the pieces making sure the sides are square to the bottom, see Fig. 2.

**BACK & DIVIDERS.** To strengthen the bottom and side pieces, a ¼"-thick hardboard **back (C)** is added to the organizer, see Figs. 1 and 2. This piece is cut to fit the opening between the rabbets in the side pieces and flush with the bottom. (In my case, 5½" x 13¾".) Then glue the back in place.

Next, I cut a couple hardboard **dividers (D)** from some scrap pieces. They fit in the dadoes already cut in the bottom and act as spacers to keep the storage bins apart. These pieces are ½" wide and fit flush with the back of the bottom piece. Finally, glue them to the bottom.

**CHAMFER.** Once the glue dries, the next step is to use a ¼" chamfer bit on the router table to rout a chamfer on the bottom front edge and the two, top front corners, see Figs. 3 and 3a. This chamfer is cut to protect the top of your hand when you reach in to pull out a bin. To prevent chipout when routing the two top corners, I used a backing board for support.

**FEET.** All that's left to complete this storage project is a pair of hardboard **feet (E)** glued to the bottom. They're set in ½" from the sides and ¼" in from the back, see Fig. 2. These feet "lock" the completed cases in place so they won't slide off to the side or off the back when one storage bin is stacked on top of another.

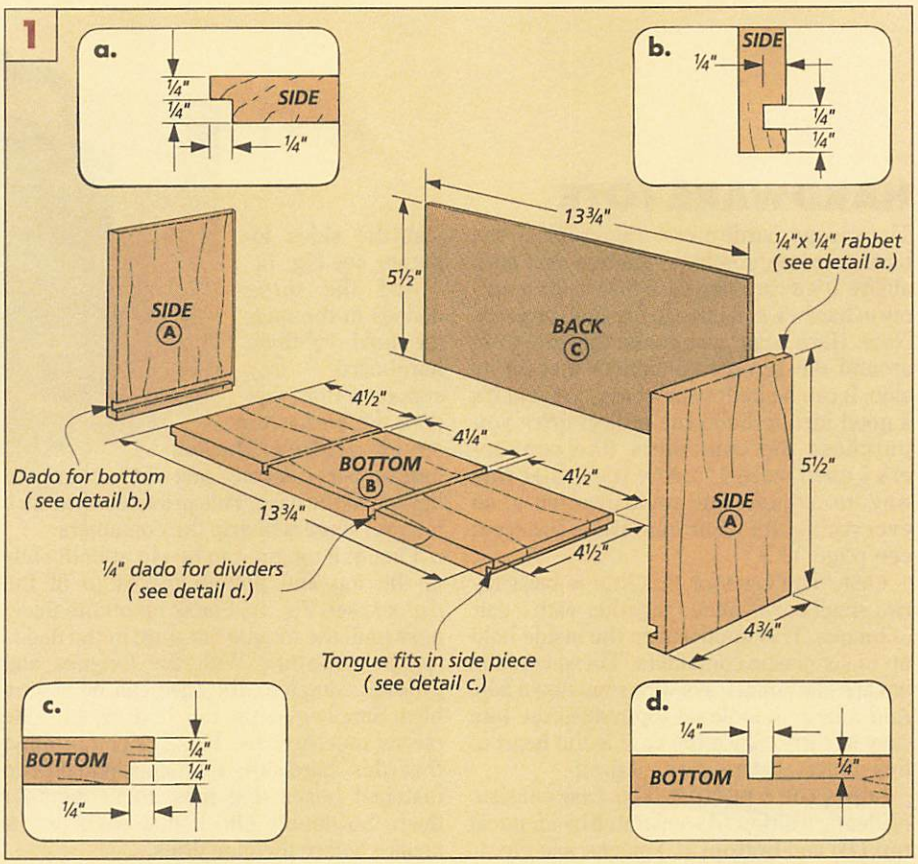


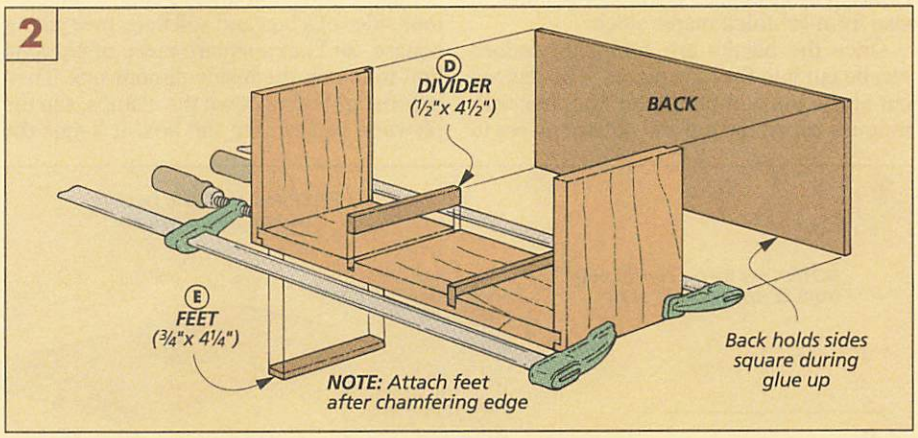


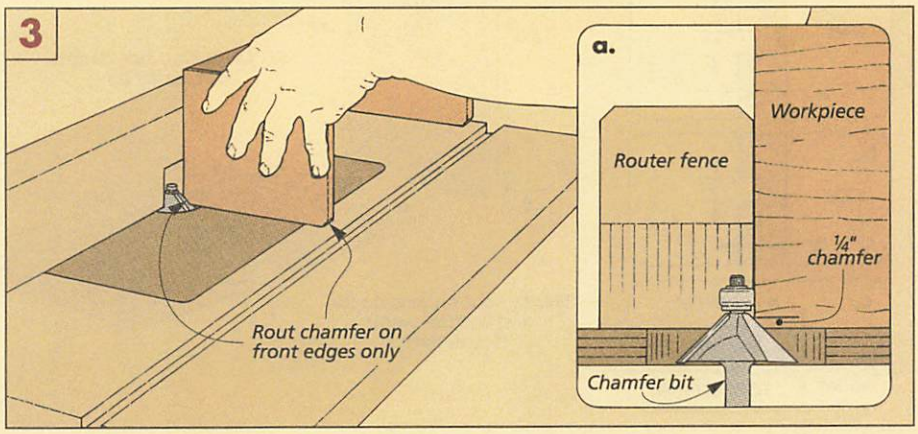

## HARDWARE TOTE

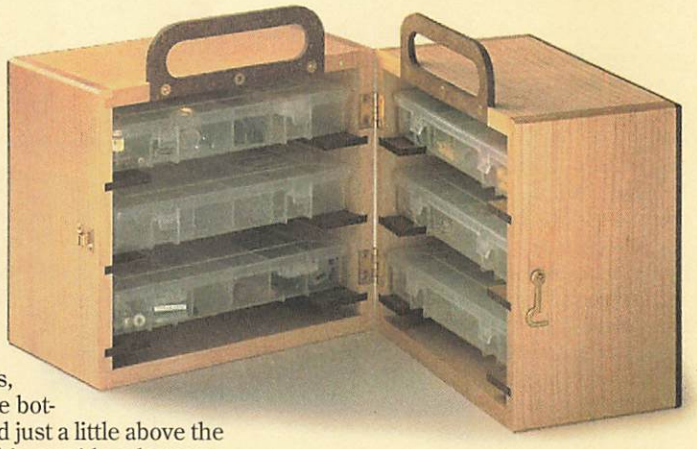

The second hardware storage project, the hardware tote, combines storage with portability. It's a carrying case that holds a variety of hardware needed to fix small projects. Note: Here again, you make this tote to fit around the storage containers that go inside. It can be built to most any size, but it's a good idea to build the project *after* you purchase the containers (the containers I used were 4" x 8"). It's easier this way to adjust the measurements so everything fits. (For container sources, see page 31.)

**CASE.** The case for this tote is basically two small boxes joined together with a pair of hinges. Tray supports on the inside hold up to six plastic containers. These containers are like small trays with snap-down lids. And a large handle on top makes the tote easy to carry. Since the case is the heart of this project, I started with it first.

**SIDES, TOP & BOTTOM.** This case consists of identical **sides (A)** separated by identical **top (B)** and **bottom (C)** pieces, see Fig. 1. I started by cutting all the pieces to finished size from ½"-thick maple stock.

Once the blanks are complete, dadoes can be cut into the side pieces. The dadoes cut at the top and bottom fit together with tongues cut on the top and bottom pieces to join the sides together, see Fig. 1a.

And the three dadoes in the middle hold ¼"-thick hardboard tray supports that support the plastic trays, see Fig. 1b. Note: The bottom support is located just a little above the bottom of the case. This provides clearance for your fingers to grip the containers.

Finally, a tongue can be cut at both ends of the top and bottom pieces to fit the dadoes, see Fig. 1c. Sneak up on the thickness until the tongue fits snug in the dado.

**CASE ASSEMBLY.** With the tongues and grooves complete, the case can be assembled. Simply glue the top, bottom, and side pieces together, see Fig. 2. Keep in mind that this hardware tote consists of two matched boxes that have to fit together flush. So double check that each box is square before the glue dries.

Shop tip: It's not always easy to glue up four sides of a box and still keep everything square. So I cut a square piece of plywood first to match the inside dimensions. Then before tightening down the clamps, slip the plywood square into the box. It keeps the sides from shifting when clamping pressure is applied, see Fig. 2a.

**CASE BACK.** With the case assembled, it's easy to size the **back (D)** to fit the case. This ¼"-thick piece of hardboard is cut to fit flush with the top, bottom, and sides and then is glued in place, see Fig. 3. (My back piece was 8⅛" x 9⅜".)

Then, to soften the sharp edges, I routed a ⅛" chamfer on the back and side edges, see Fig. 4. Note: Don't rout a chamfer on the inside face where the two boxes mate. This will create a gap when the tote is closed.

**TRAY SUPPORTS.** Next, hardboard **tray supports (E)** are added to the inside. These ¼"-thick pieces, cut to finished size (1½" x 4¾"), are glued in the dadoes cut in the side pieces, see Fig. 3.

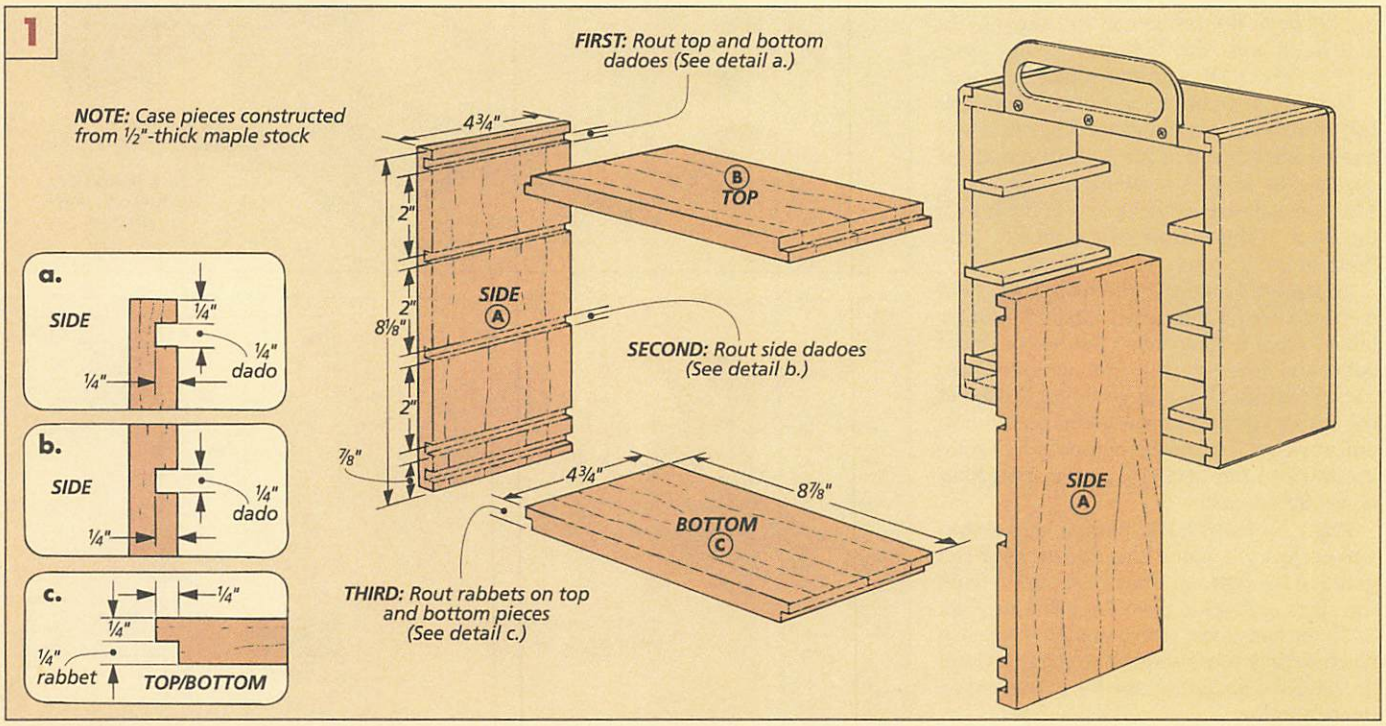

**HANDLE.** Finally, to complete the case, a **handle (F)** is added to the top. Each half has it's own ¼"-thick handle. With the tote closed, the two handles come together to form a thicker handle that's easier to grip.

The handle is cut out of a ¼"-thick piece of hardboard (2" x 5¾" blank), see Fig. 5. But to get identical handles, I carpet taped the two blanks together and made both handles at the same time.

I started by drawing layout lines for the handle on the blank and then removing the waste from the middle. The easiest way to do this is to drill overlapping holes with a 1" Forstner bit, see Fig. 6. A drum sander can be used to clean up the leftover waste in the middle and round off the outside corners.

Finally, drill three evenly spaced mounting holes in the bottom of the handle. Then separate the pieces and countersink the holes. This way the screws will fit flush.

Before the handle can be installed, a notch has to be cut on the inside edge of the case, see Fig. 7. This notch recesses the handle so the box will close completely. I used the handle as a template and marked the location on the case.

Simply use a router table to remove most of the waste, staying clear of the layout lines at the corners, see Fig. 7a. Then use a chisel to clean up to the line. Finally, glue and screw the handle in place.

**HINGES & CATCH.** All that's left to finishing the tote is adding the hardware. This includes a pair of 1" butt hinges and a catch on the front.

I started with the hinges. They're mortised into the edge of the sides and allow the tote to swing shut making it easier to carry, see Fig. 8 and photo below. Simply cut a mortise into one edge of the case with the depth equal to the thickness of one hinge leaf. Now to transfer the hinge location to the other half, just install the hinge and use it to mark the position on the other edge.

Finally, to keep the tote closed, a latch is installed midway up on the front side. The screw that came with the hook was a little long for the ½"-thick sides. So I shortened it by cutting off part of the tip. ❑

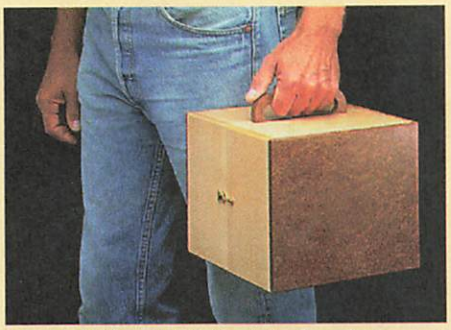

***Portability.*** *With the tote closed, you can easily move hardware to the job and not worry about spilling the contents.*

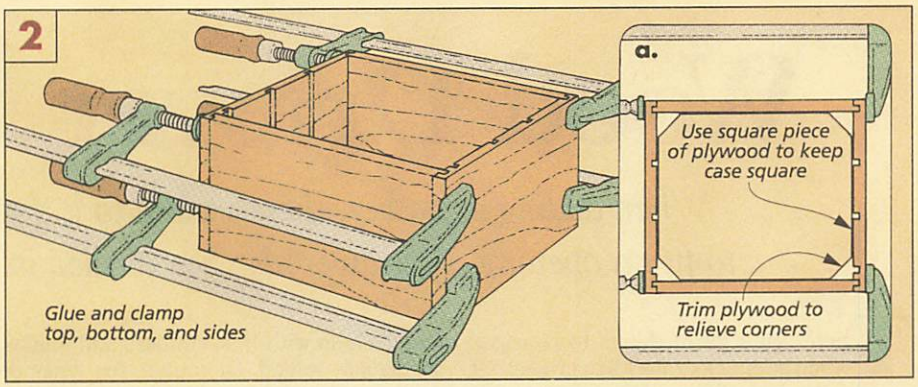


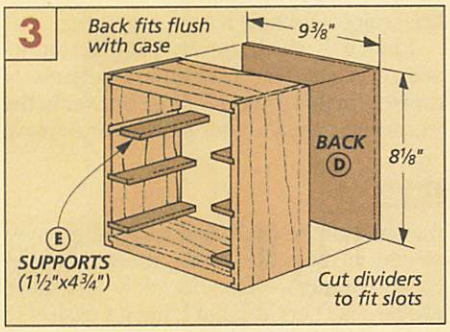


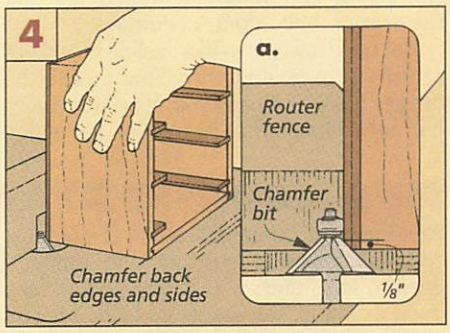


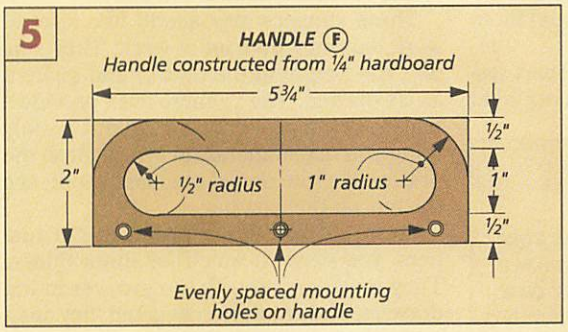

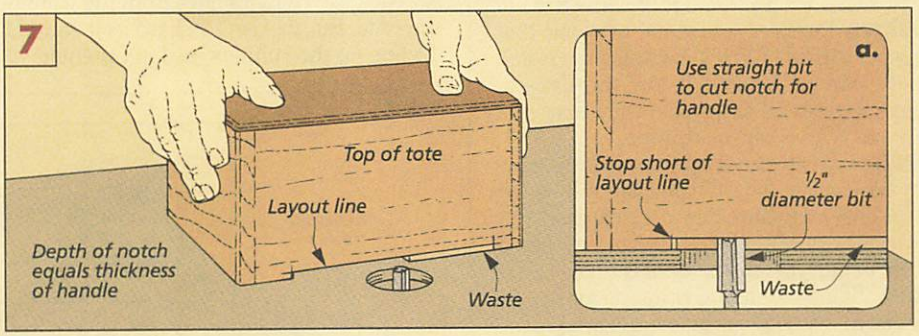


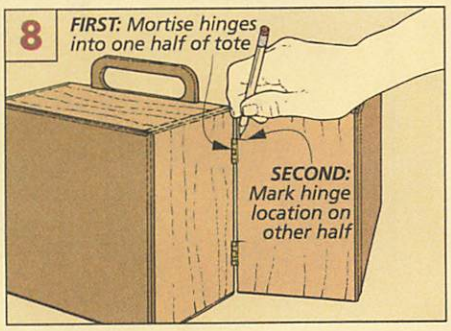


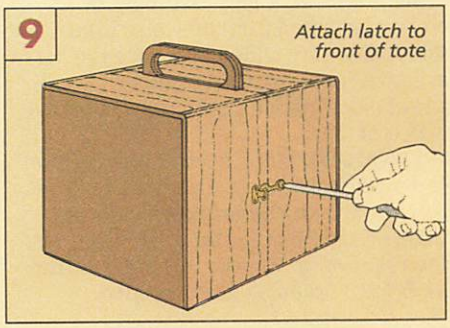

# Wood Drawer Guides

*When adding a drawer, there's more to it than just building it to fit an opening. A drawer also has to slide in and out smoothly.*

There are a lot of things to consider when adding a drawer to a project. Of course, the first thing you think of is sizing the drawer to fit into its opening.

But the drawer also has to slide in and out of the opening smoothly. This means the drawer has to fit loose enough to slide easily, but not so loose that it racks as it's pulled out. To help with this, runners and guides are usually added. Of course, the types of runners and guides you use will depend on the project and how it's put together.

Take the wardrobe on page 6, for instance. There are two different types of drawers in this project: a large drawer in the wardrobe case and four smaller drawers in the inner case. Because these are different, the wood guides I used were different too. One is mounted at the sides. The other is guided at the bottom.

We thought you might like to know some of the how's and why's of adding drawer guides. Who knows? You may end up using one of these on your next project.

## SIDE-MOUNTED DRAWERS

Side-mounted runners are one of the most common ways to support and guide a drawer. The inner case of the wardrobe is a good example, see drawing below. There's nothing between the top and bottom drawers, so the best solution was to mount them at the sides.

Side-mounted drawers are a two-part system. There are wooden runners screwed to the sides of the case. And stopped grooves routed in the sides of the drawer fit over these runners. The location of these grooves isn't critical, but I find it's easiest to center them on the drawer sides.

These runners may sound like a lot of work, but they do a lot of work. They support the weight of the drawer and guide it as it's opened. The runners even provide a built-in stop as the door is closed. The only thing you may want to add is a catch so the drawer can't be pulled completely out, see the box on the next page.

**INSTALLATION.** When installing the runners, you need to watch for three things. They must line up with the grooves in the drawers. They must be level. And they must set back the right amount from the front of the case. But this isn't as hard as it sounds. To line up the runners *and* get them level, use a simple spacer. Its height should match the location of the groove *plus* an extra 1/16" for the gap below the drawer. Then when attaching the runners, all you have to worry about is getting them set back from the front edge the correct distance.

**EXPANSION.** Because these runners were screwed to solid wood, they have to allow the panels to expand and contract with changes in humidity. Otherwise, the sides of the carcase could split. The solution is to use a slotted shank hole at the back of the runner so the panel can move, see Fig. 1a.

You'll find that once the drawers are in place, they won't necessarily slide smoothly. All that's required is a little sandpaper. But remember, with side-mounted drawers, you should sand the *bottoms* of the runners only. Sanding the top will change the position of the drawer slightly.

### GLOSSARY

What's the difference between a drawer runner, a guide, a slide, and a glide? You see these terms in books, magazines, and catalogs, but they're not used consistently. Here's how we use them in *Woodsmith*.

**RUNNERS.** Runners are strips of wood that support a drawer as it's opened and closed. These can be located below the drawer, above it, or at its sides, and they may also serve as guides for the drawer.

**GUIDES.** Guides prevent a drawer from moving side-to-side. Often these are thin wood strips applied to the sides of the carcase. But for wider drawers, the guide can be located at the center, below the drawer.

**SLIDES.** Slides are metal runners/guides attached to the sides or below a drawer. This hardware creates a gap that must be covered by a rabbeted front or a false front.

**GLIDES.** Glides are added to reduce the friction between a drawer and a runner. Usually made of nylon, glides can be either buttons or strips of tape.

**STOPS & CATCHES.** Stops keep a drawer from being pushed too far in. Catches prevent a drawer from being pulled completely out.

**KICKERS.** Kickers are strips of wood attached above a drawer to prevent the drawer from dropping as it's opened.

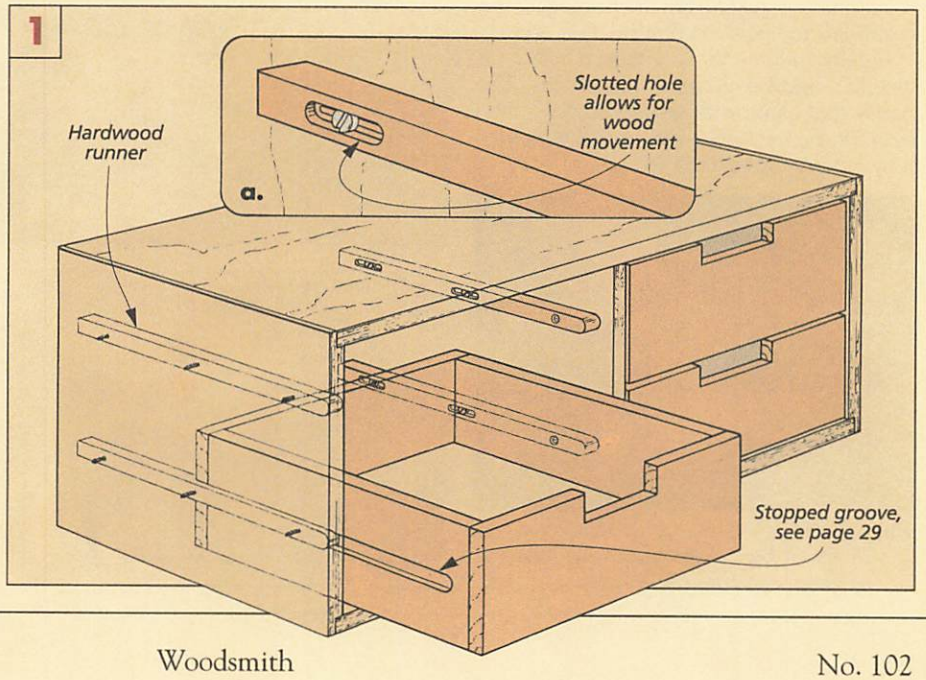

## BOTTOM-SUPPORTED DRAWERS

Like the side-mounted drawers in the inner case, the drawer at the bottom of the wardrobe doesn't have a frame under it either. But I didn't mount this drawer on the sides. Instead, it's supported from the bottom.

The reason is simple. This drawer is large and wide. A large drawer is harder to build exactly square and exactly the right size, so it's harder to build it to fit an opening exactly. And because it's wide, the drawer will rack much easier as it's pulled out.

There are two solutions to getting a large, wide drawer to slide in and out smoothly. One is to support the weight of the drawer by adding runners at each side of the case. And the other is to guide the drawer with a center guide system.

**RUNNERS.** To support the weight of the drawer, I added runners to the sides of the wardrobe case, see Fig. 2. These runners were made of hard maple, because it's both smooth and durable.

I installed the runners 1/16" above the rail cap at the front of the case. This automatically sets the gap between the drawer and the cap, which also means the drawer won't rub against the cap.

**KICKERS.** Runners will support a drawer from below, but drawers need to be supported from above too. Otherwise, the front of the drawer will drop as it's pulled out. With the wardrobe, the shelf cleat above the drawer prevents this from happening. If the cleat weren't there, you would have to add some thin strips, called kickers.

**GUIDE SYSTEM.** Now that the drawer has some support, the next step is to work on getting the drawer to slide in and out smoothly. On a narrow drawer, you could add thin strips at the sides of the case to guide it. But with a wide drawer, the best solution is to guide the drawer at the center — below the drawer.

With a wide drawer, a single drawer guide works best. This is simply a single strip of wood that the drawer rides over. To get the drawer to ride over the guide, I create a custom-fitted groove on the bottom of the drawer. This groove isn't cut out of the bottom (which is only 1/4"-thick plywood). Instead, it's built up on the bottom.

To do this, cut notches on the front and back of the drawer and glue on narrow guide runners. This creates a "channel" for the guide to run in, see Fig. 3.

There are two things to keep in mind about this system. First, you don't want the weight of the drawer to rest on the guide. It should be on the runners at the sides. So when building the drawer, make sure the drawer bottom is high enough to pass over the guide.

Also keep in mind that you'll need to add a false front to cover the notches in the drawer. But don't be tempted to use this false front as a stop. On the other hand, you also don't want to stop the drawer against the thin back of the case. Either of these "solutions" can create problems for you later. Instead, your last step will be to add a couple stops (and catches), see the box below. ❑

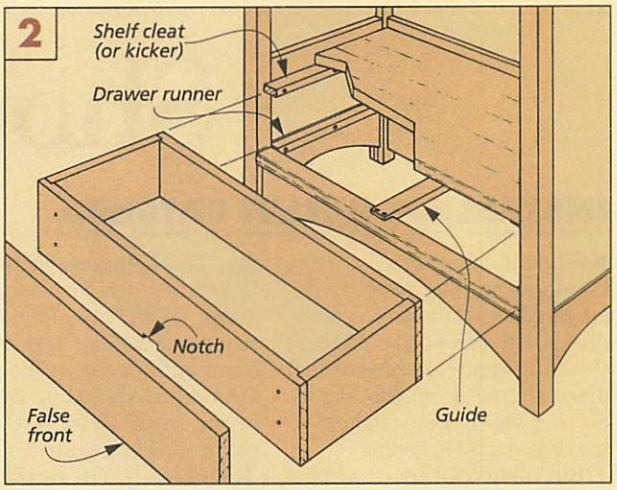


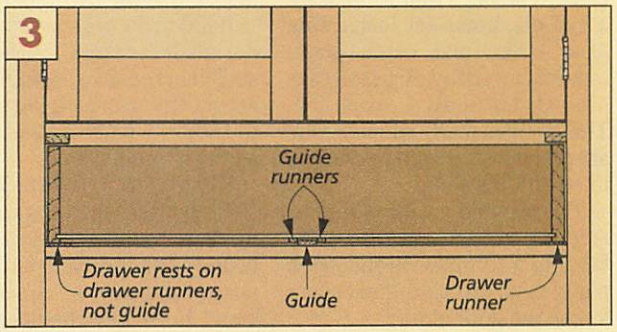


## DRAWER STOPS & CATCHES

There are a couple questions that often get overlooked when designing a project: "How are the drawers stopped when you're pushing them closed? And what catches them from being pulled all the way out (and spilling their contents on the floor)?" The answers to both questions are fairly simple.

The best way to stop a drawer when closing it is to add a stop block (or a pair of blocks) at the back of the case.

When pulling a drawer open, the answer will depend on the carcase. If there's a solid panel above the drawer, you'll need to use a small block and cut a notch in the drawer. Otherwise, you can use a turnbutton.

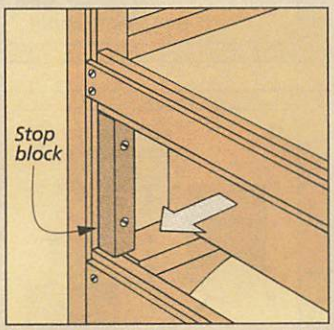


***Stop In.*** *A drawer shouldn't stop against the back of a case. A simple block does the trick.*

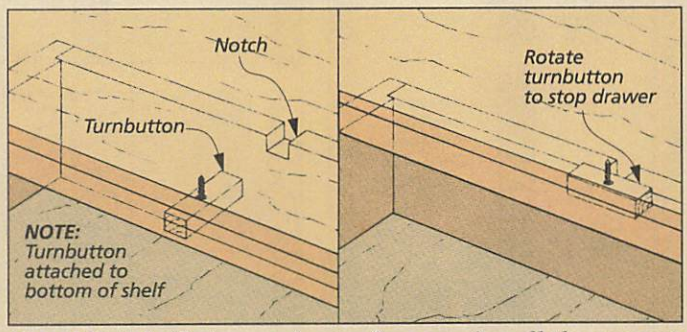


***Panel Catch.*** *To keep a drawer from coming all the way out, add a simple turnbutton. When there's a solid panel above the drawer, you'll need to cut a notch in the back of the drawer.*

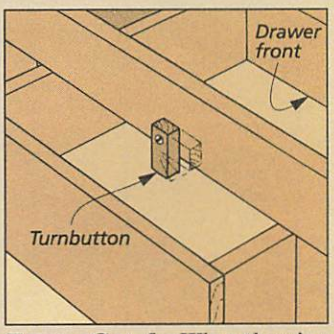


***Frame Catch.*** *When there's a case frame, to catch the drawer a turnbutton is all you need.*

# Shop Notes

## INSTALLING BULLET CATCHES

■ When it came time to install the doors on the wardrobe (refer to page 6), there was some discussion on how to hold them closed. I wanted hardware that didn't detract from the beauty. So I used bullet catches — they're nearly "invisible."

But I didn't use just *any* bullet catch. The ones that I chose are a 7/16"-dia. brass set (consisting of a strike and catch plate) manufactured by Brusso. (See Mail Order Sources, page 31). They're well made catches, that are machined to tight tolerances to ensure durability.

The way they work is simple. A spring-loaded ball in the strike fits into a "dimple" in the catch plate. And the spring pressure keeps the door closed.

What's a little different here is how the strike and catch plate are installed. You simply drill a hole to match the size of either piece and tap them in place.

**ORIENTATION.** Normally, I install the strike in the door frame first. This helps me get the other half of the catch positioned accurately. With the door closed (and a small gap between the frame and door stop), the spring-loaded ball should be centered in the catch plate. But on the wardrobe I had to do things a little differently. The catch plate is installed in the door instead.

It has to do with the wardrobe design. If the strike had been installed in the door, it would drag across the overhanging top (or the bottom) and eventually wear a groove in the wood.

**CATCH INSTALLATION.** To install a Brusso catch plate, simply mark a couple of layout lines centered on the width and thickness of the door stile, see Figs. 1 and 1a. Where the lines intersect, drill a 7/16" hole, see Fig. 2. Note: Don't remove the layout lines. They'll be used later to mark the location for the strike.

Setting the depth can be a little tricky. The goal is to get the indentation on the catch plate flush with the surface of the wood, see photo. To keep from drilling the hole too deep, I installed a stop collar on the shank of a Forstner bit, see Fig. 2a.

Shop Tip: Check the exact depth with a scrap piece of wood. Drill a hole, cut the scrap in half, and set the catch plate in the opening.

Also, make sure the indentation on the catch plate is installed so it's parallel with the door frame.

Finally, a lot of drill bits cut slightly oversize holes. Since Brusso's catch plates (and strikes) are machined to an exact diameter, they may fit loose in the hole. To remedy this, I put a little epoxy in the hole first.

**STRIKE INSTALLATION.** When the catch plate was installed, I worked on the strike next. To find the location for this hole, simply close the door and transfer the lines already marked on the door stile to the top (and bottom) of the wardrobe, see Fig. 3.

Now set the depth for the strike using the same method you used for the catch plate, see Fig. 3a. Then drill the hole and epoxy the strike in place. Here the top corner of the strike is flush with the face of the wood.

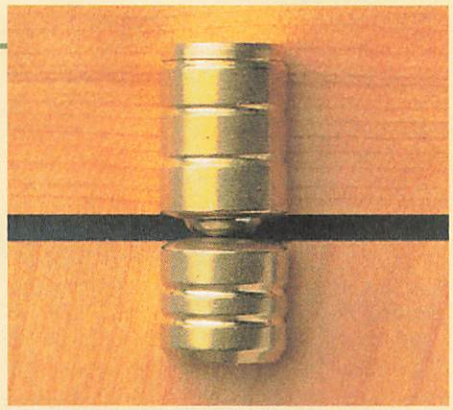

***Bullet Catch.*** *The strike on top will hold a door closed when its spring-loaded ball fits into an indentation in the catch.*

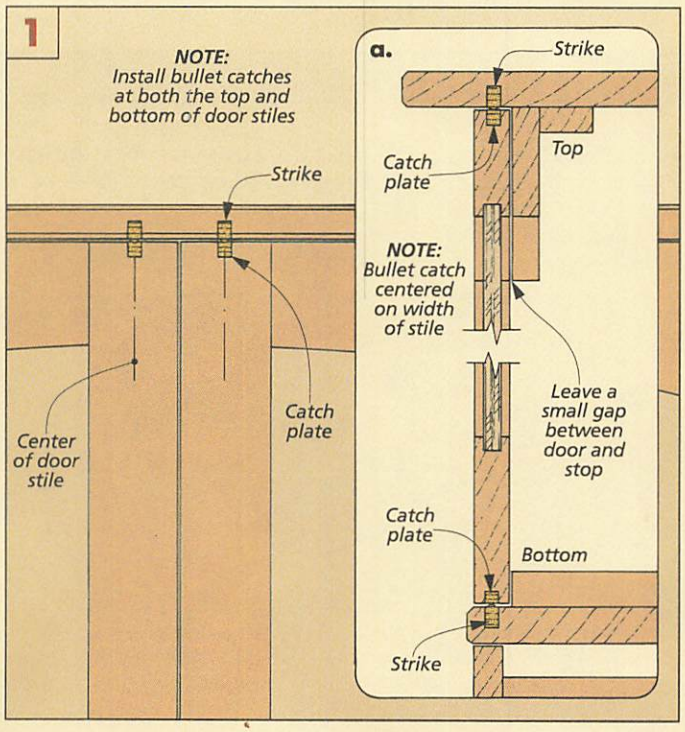


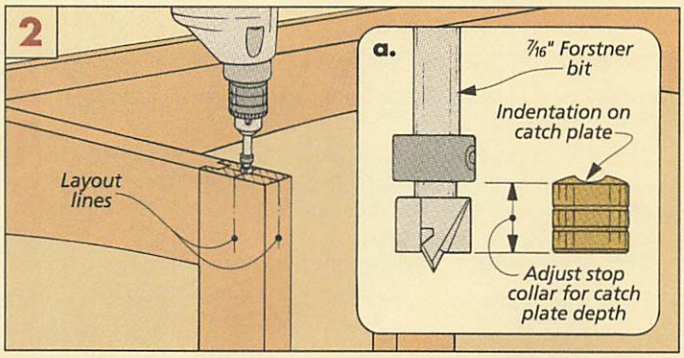


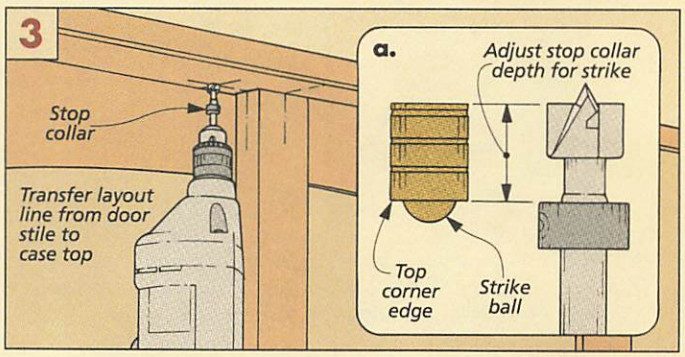

## ARC SANDING BLOCK

■ After cutting out the arcs on the wardrobe (see page 6), don't throw the waste away. It makes an ideal sanding block for finish sanding the inside edge.

Just cut out a piece to fit comfortably in your hand, see Fig. 1. Then attach a thin strip of self-adhesive sandpaper to the inside edge. The long arc on the block follows the cut left by the band saw to smooth out any indentations, see Fig. 2.

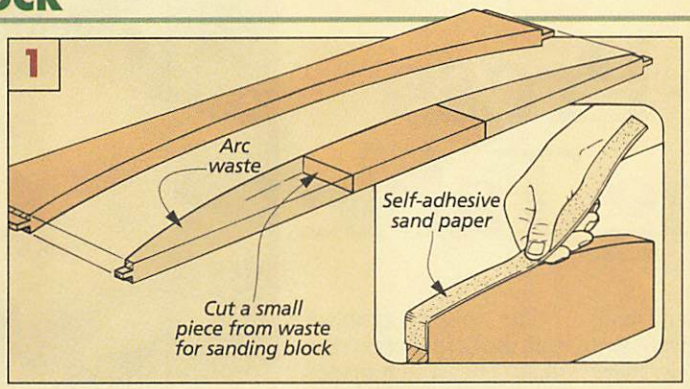

## AUXILIARY FENCE FOR ROUTING KEYS

■ When it came time to rout the keys for the cutting board, I ran into a couple of problems. First the routed edge of the key blank would slip under the fence and change the key angle, see Fig. 1. (My router fence has a small chamfer cut on the bottom edge for a sawdust groove.)

The other problem was the opening around the bit. It was too large to handle the short, 5"-long key blanks safely.

So to solve these problems, I added an auxiliary fence to the table, see Fig. 2. It's simply two pieces of stock (a hardwood fence attached to a plywood base) glued together and clamped to the existing fence. Since there's no sawdust relief cut into this fence, the key can't slide underneath.

There's also a hole cut in both pieces that's just large enough for the router bit. This keeps the workpiece from dropping into the hole, see Fig. 2a.

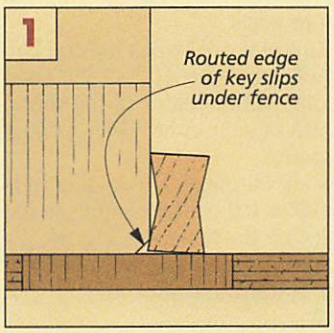


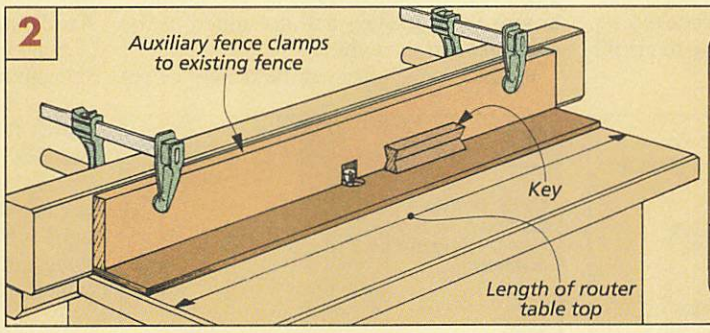


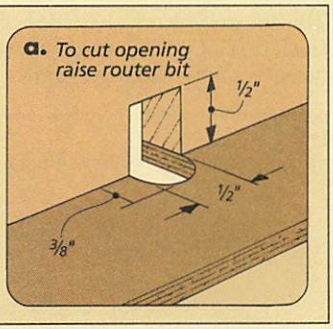


## CUTTING DRAWER GROOVES

■ Cutting a stopped groove isn't difficult. But it must be straight and true. When routing grooves for drawer guides (like in the wardrobe), I use a couple techniques to make the job easier.

To rout the grooves in the sides, the trick is getting them centered in only one pass, see Fig. 1. So I start with a V-groove bit (or some other bit with a sharp point) and align the point of the bit with the centerline on the drawer side, see Fig. 1a. Then slide the fence up to the drawer and lock it in place.

With the fence set, the V-groove bit is replaced with a straight bit, see Fig. 1b. Don't move the fence when changing bits. Otherwise the groove will have to be centered again.

The next step is to position the stop block so the distance from the far edge of the bit to the block equals the groove length.

Finally, to keep from gouging the sides of the groove, I add a guide board to the front of the table. It prevents the drawer from moving away from the fence during the cut. I thought about using a featherboard. But the fingers prevent you from pulling the drawer back after the cut.

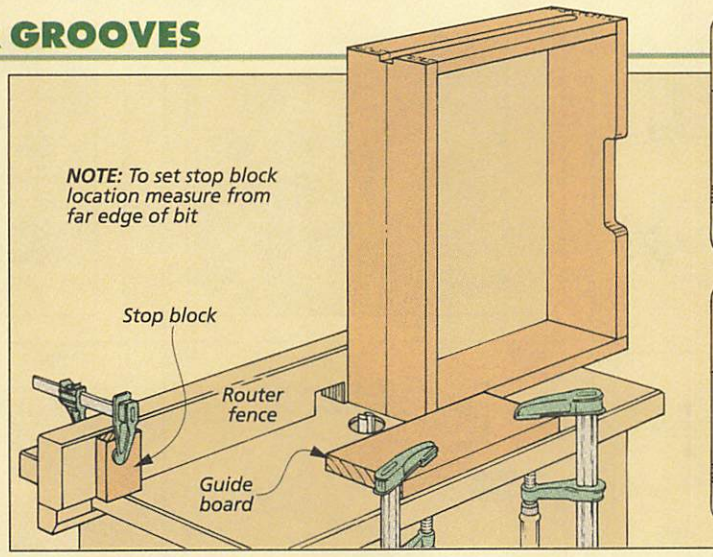


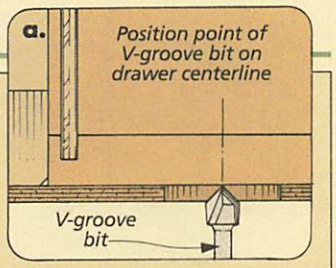


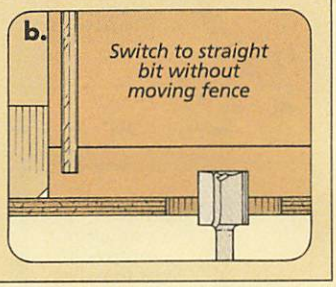

# Drill Press Sanding Table

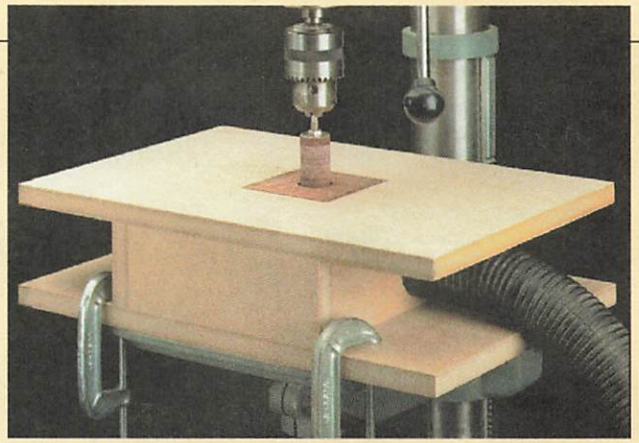

A drum sander is a quick way to sand up to a layout line. But to use one effectively, you need a sanding table. Unfortunately, there are two problems with most tables. One is matching the hole in the table to the size of the sanding drum. And the other is controlling sawdust. That's why I like the design of a sanding table sent in by **Bill Charlton** of Elmer, New Jersey. It solves both problems.

Typically, a sanding table uses a different size insert for each of the sanding drums. At first glance, Bill's jig didn't look much different from other tables, see photo. But after a closer look, the insert that the drum fits into isn't really an insert at all — it's a cube. This means you only have one piece to keep track of. But it will still handle up to six different sizes of sanding drums.

The other problem with drum sanders is sawdust. The larger drums can kick up quite a cloud of dust. To control this, a hole for a vacuum hose is added to one of the sides of the jig.

**CUBE.** Since the sanding table is built around the cube, I started work on it first. The cube consists of four sides, a top, and a bottom of ¼"-thick hardboard (Masonite). The sides are the same size (3¼" x 3 ½) and are glued together using simple butt joints, see Figs. 1 and 1a.

Once the glue dries, the top and bottom pieces can be added. They're also identical in size (3¾" x 3¾") and are glued to the sides to form the cube.

**HOLES.** Now holes can be drilled or cut in the cube to match your drum sizes. The location doesn't have to be exact. Just center the holes on the cube sides, see Fig. 2.

**TABLE.** With the cube complete, the sanding table can be built. It's built out of medium density fiberboard (MDF) and is nothing more than a shallow box with an overhanging top and bottom, see Fig. 3. The oversize bottom provides a good clamping surface when mounting the jig to the drill press table. And the top is large enough to handle most projects.

Start by cutting the ¾"-thick top and bottom pieces to finished size (12" x 18"). Then cut an opening in the center of the top to match the size of your cube. (My opening was 3⅞" square.)

The sides are cut next. The goal here is to make the sides tall (wide) enough so the cube is flush with the table, see Fig. 3a. Finally, cut a hole for your vacuum hose and glue the top, bottom and sides together. ❑

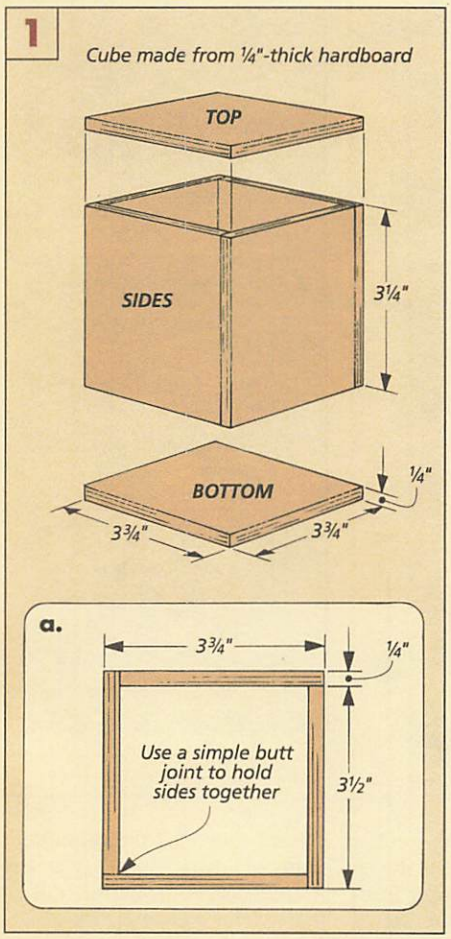


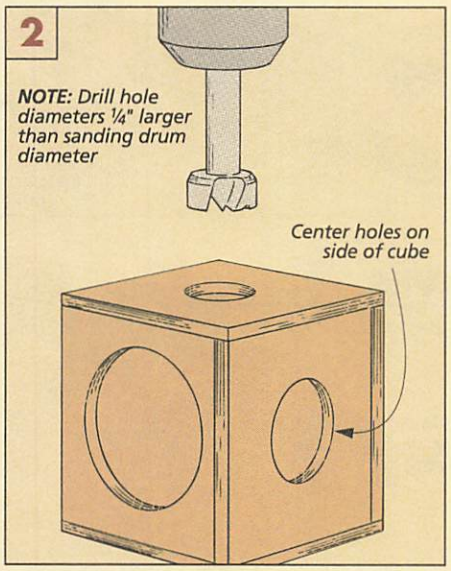


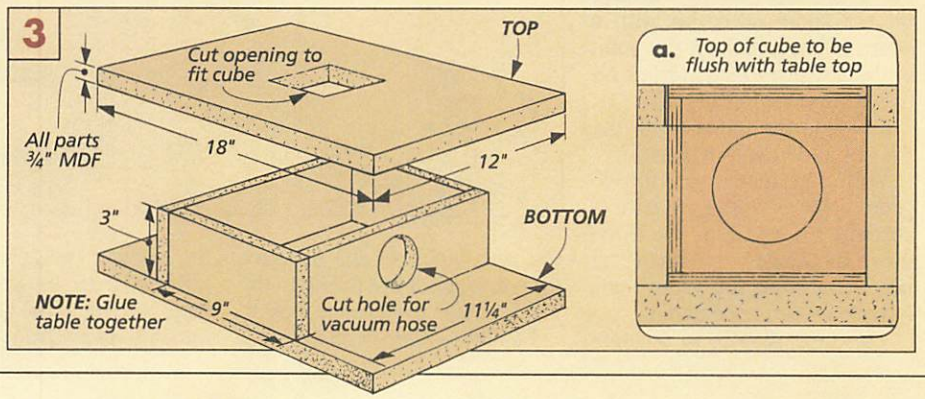


### FEATURE YOUR JIG

If you've built an *original* jig and would like to see it featured on this page, send your idea to *Woodsmith*, Reader's Jig, 2200 Grand Ave., Des Moines, IA 50312.

If we publish it, we'll send you $100 and a full set of *Woodsmith* back issues, with binders. (This set retails for over $300.) Include a sketch (or photo) of your jig and explain how it's used. And *please* include a daytime phone number.

# Sources

## PROJECT SUPPLIES

■ *Woodsmith Project Supplies* offers hardware kits and supplies for some of the projects shown in this issue. Supplies for these projects are also available at your local hardware store or through one of the mail order catalogs listed below.

**WARDROBE.** A complete hardware kit for the wardrobe on page 6 is currently available. This kit includes all the flathead and panhead woodscrews you'll need, plus the following:

- (4) 1⅛"-dia. Cherry Knobs
- (4) 7/16"-dia. Bullet Catches
- (3 pair) 2½" x 2" Extruded Brass Hinges

**W102-7102-100** Wardrobe Hardware Kit ..... $84.95

This or similar hardware is available from local hardware stores as well as the woodworking catalogs that are listed in the Mail Order Sources below.

**WARDROBE FINISH.** To finish the wardrobe, I simply applied a few coats of General Finishes' *Royal Finish.* This is just a thinned down varnish so you can wipe it on and off easily. (I found that a common paint pad worked well on the wardrobe's large surfaces.)

*Woodsmith Project Supplies* is currently offering General Finishes' *Royal Finish.*

**W102-4003-602** *Royal Finish* (Satin)..... $11.95 quart

**HARDWARE BINS.** To find the bins or trays needed for the hardware storage units, you'll need to take a trip to your local hardware store. Or order them through the mail order catalogs listed below.

## FINISHING BOOK

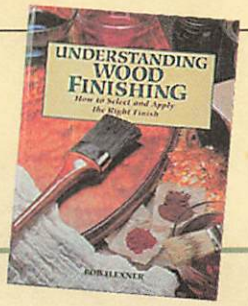


■ I get a lot of questions from readers looking for help when finishing a project — usually after something has gone wrong. Most of the time, the solution is simple, if you understand a little about the finish. And for this, I often suggest getting a copy of *Understanding Wood Finishing*, by Bob Flexner.

For starters, this book is like a good tool — it's accurate. Bob knows the chemistry of finishes and how they work. But unlike my high school chemistry teacher, he can explain the how's and why's of finishing in plain language. And he must be a woodworker because he answers many of the problems that are common to woodworkers.

Of course, it doesn't matter how accurate the information is if it's difficult to find. When you've got bubbles drying in your finish, you don't want to spend time thumbing through a book. That's not a problem here.

There are separate chapters dedicated to specific finishes, like oils, varnish, and water-based finishes. So it's quick and easy to find the finish you're having problems with. Plus, you don't have to read the whole chapter. There are boxes and charts with helpful information you can get to quickly.

*Understanding Wood Finishing* is a handy tool for any shop. It's currently available from *Woodsmith Project Supplies* or the catalogs listed below.

**W102-2003-600** *Understanding Wood Finishing*..... $27.95

## CUTTING BOARD FINISHES

■ Speaking of finishes, there's one question I get asked a lot: What finish is safe to put on eating utensils and kitchen items, like the cutting board on page 18? This is a hard question to answer because no one has studied it to find out.

You could do what I do sometimes: leave it unfinished. When it begins to look dried out, simply wipe on a coat of mineral oil or walnut oil, both approved for human consumption.

Another easy answer is to suggest a finish that's sold as "non-toxic". But "non-toxic" implies that other finishes are toxic, which isn't necessarily true. It's the solvents in the finish that are dangerous, but most, if not all, of the solvents will evaporate as a finish cures.

A film finish, like a varnish, lacquer, or water based finish, would provide a lot more durable protection. But they won't last long on a cutting board, where the finish may flake off after being cut up with a knife.

Still another possibility would be to use an oil/varnish finish (which is what the "non-toxic" finishes are). These won't flake off because the oil in it keeps it too soft to build a thick film.

### HOW TO ORDER

To order a project kit from *Woodsmith Project Supplies*, use our Toll Free order line. It's open Monday through Friday, from 7 AM to 7 PM Central Time.

Before calling, please have your VISA, MasterCard, or Discover Card ready.

If you would like to mail an order in, call the number below for more information on shipping charges and any applicable sales tax.

**1-800-444-7527**

*Note: Prices subject to change after February, 1996*

## MAIL ORDER SOURCES

*Similar hardware and supplies may be found in the following catalogs. Please call each company for a catalog or information.*

**Constantine's**
800-223-8087
*Brusso bullet catches, Wardrobe hardware (maple knobs)*

**Berland's World of Tools**
800-339-0026
*Hardware bins*

**Enco Manufacturing Co.**
800-873-3626
*Hardware bins and trays*

**McFeely's**
800-443-7937
*Hardware bins*

**Woodcraft**
800-225-1153
*Brusso bullet catches, Wardrobe hardware (maple knobs)*

**The Woodworkers' Store**
800-279-4441
*Brusso bullet catches, Wardrobe hardware (cherry knobs), General Finishes*

**Woodworker's Supply**
800-645-9292
*Wardrobe hardware (maple knobs), General Finishes*

*WoodNet*

**COMPUTER BULLETIN BOARD FOR WOODWORKERS**

- Project Plans to Download
- Woodworking & Finishing Techniques Forums
- Back Issue Indexes for *Woodsmith* & *ShopNotes*
- For PC and Mac
- FREE First Month
- Download on First Call
- Join Hundreds of Members

To log on to WoodNet, set your communication program to 8 data bits, 1 stop bit, no parity, full duplex, and ANSI terminal emulation. Then call 1-515-245-9663.

Questions? Call us at: 515-282-7000 x2173, M-F 9-5 Central Time.

# Final Details

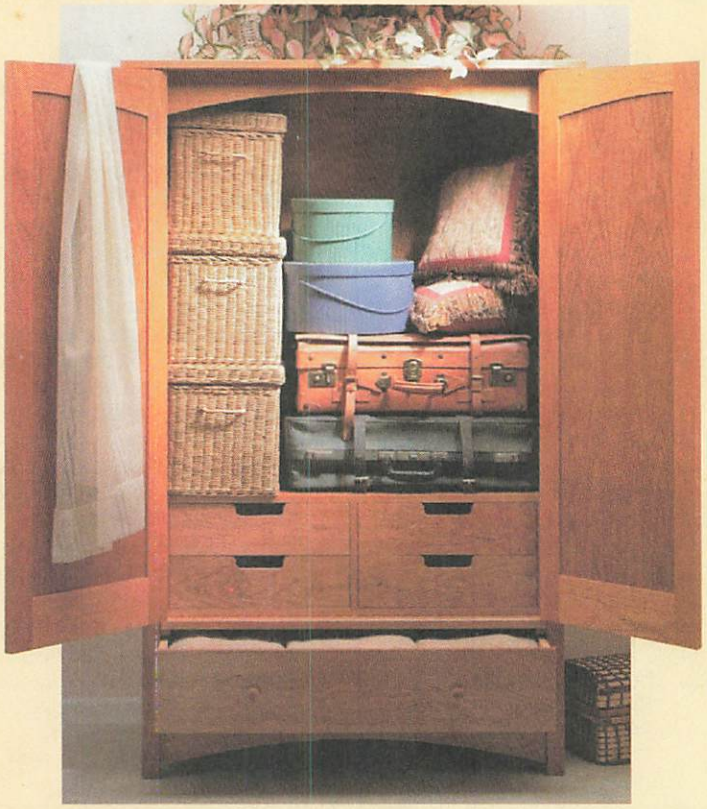

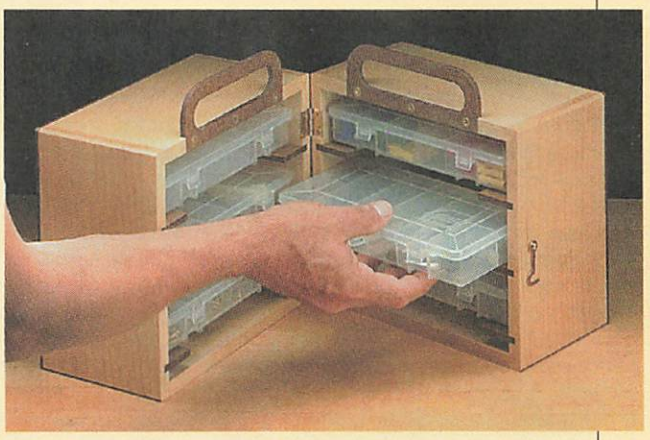

▲ ***Hardware Tote.*** *This handy tote holds a variety of hardware (and some small tools). Now when something needs fixing, simply swing the tote closed and take the hardware you need right along with you to the job.*

◄ ***Cherry Wardrobe.*** *This cherry wardrobe is a versatile project, especially when you add the optional four drawer case inside. It's great for extra storage in a bedroom. Or you can put it in the family room and use it as an entertainment center.*

▲ ***Cutting Board.*** *The butterfly-shaped keys on this cutting board are more than just decorative. They also prevent the glue lines from splitting open at the ends of the board.*